P2597-C02

Jetson TX1/TX2 Developer Kit Carrier Board
Supports Jetson TX1/TX2/TX2i

TABLE OF CONTENTS

Page	Description
1	Table of Contents
2	Block Diagram
3	Power Tree
4	IO connector 1/3
5	IO connector 2/3
6	IO connector 3/3
7	BLANK
8	USB3.0 type A and USB2.0 micro
9	PCIe x4 Connector
10	M.2 KEY E
11	SDcard Slot
12	SATA
13	Gigabit Ethernet
14	HDMI
15	Serial port and JTAG
16	IO Expansion Connector
17	DSI Connector
18	CSI Connector
19	ON OFF CONTROLLER
20	ON OFF CONTROL OUTPUT LOGIC
21	GPIO Expanders
22	FAN AND DEBUG
23	12V BOOST
24	EEPROM
25	Supervisor
26	BLANK
27	DC Jack
28	5V & 3V3 Vregs
29	3V3 SLP AND 1.8V Vregs
30	Rail Discharge
31	Power Monitor I
32	Power Monitor II
33	Buttons and Mechanical
34	REVISION HISTORY

P2597 I2C Port Assignments

Slave Device	BUS:Device address
INA3221 (Power measurement)	I2C Gen 2 : 7'h42
INA3221 (Power measurement)	I2C Gen 2 : 7'h43
TCA9539 (GPIO Expander)	I2C Gen 2 : 7'h74
TCA9539 (GPIO Expander)	I2C Gen 2 : 7'h77
BOARDID EEPROM	I2C Gen 3 : 7'57h

P2180 I2C Port Assignments

Slave Device	BUS:Device address
TMP451 (Thermal)	I2C Gen 1 : 7'h4C
ADS1015 (ACA detection)	I2C Gen 2 : 7'h4A
INA226 (Power measurement)	I2C Gen 2 : 7'h46
INA3221 (Power measurement)	I2C Gen 2 : 7'h40

ASSEMBLY	<ASSEMBLY_DESCRIPTION>
PAGE DETAIL	Table of Contents

ALL NVIDIA DESIGN SPECIFICATIONS, REFERENCE SPECIFICATIONS, REFERENCE BOARDS, FILES, DRAWINGS, DIAGNOSTICS, LISTS AND OTHER DOCUMENTS OR INFORMATION (TOGETHER AND SEPARATELY, 'MATERIALS') ARE BEING PROVIDED 'AS IS'. THE MATERIALS MAY CONTAIN KNOWN AND UNKNOWN VIOLATIONS OR DEVIATIONS OF INDUSTRY STANDARDS AND SPECIFICATIONS. NVIDIA MAKES NO WARRANTIES, EXPRESSED, IMPLIED, STATUTORY OR OTHERWISE WITH RESPECT TO THE MATERIALS OR OTHERWISE, AND EXPRESSLY DISCLAIMS ALL IMPLIED WARRANTIES INCLUDING, WITHOUT LIMITATION, THE WARRANTIES OF DESIGN, OF NONINFRINGEMENT, MERCHANTABILITY OR FITNESS FOR A PARTICULAR PURPOSE, OR ARISING FROM A COURSE OF DEALING, TRADE USAGE, TRADE PRACTICE, OR INDUSTRY STANDARDS.

NVIDIA CORPORATION
2701 SAN TOMAS EXPRESSWAY
SANTA CLARA, CA 95050, USA

NV_PN	600-82597-BASE-900		
PCB REV	P2597-C02	PAGE	1 OF 34
BOM REV	A	DATE	23-OCT-2017

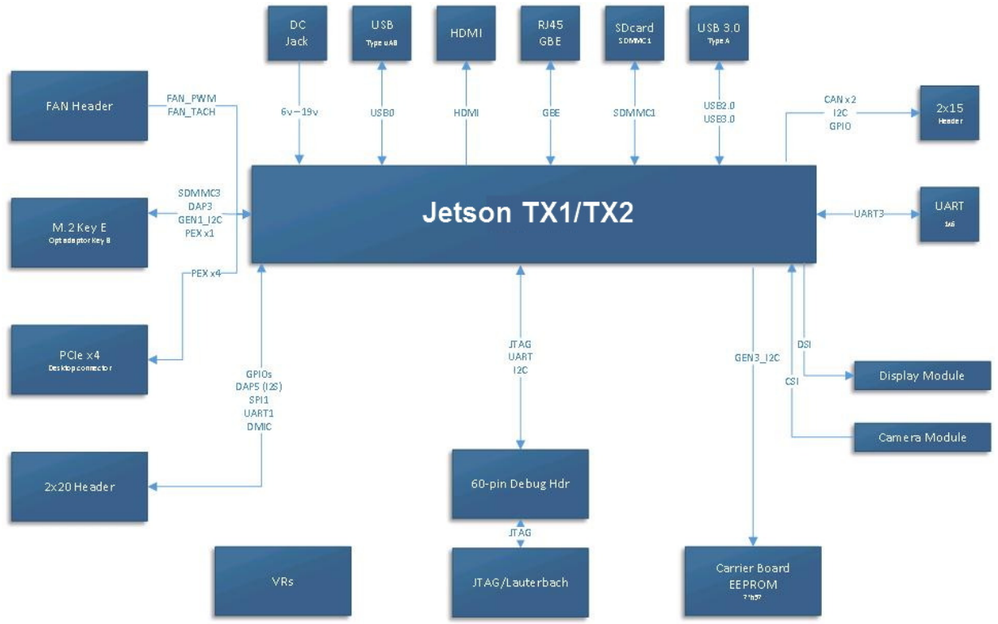

ALL NVIDIA DESIGN SPECIFICATIONS, REFERENCE SPECIFICATIONS, REFERENCE BOARDS, FILES, DRAWINGS, DIAGNOSTICS, LISTS AND OTHER DOCUMENTS OR INFORMATION (TOGETHER AND SEPARATELY, 'MATERIALS') ARE BEING PROVIDED 'AS IS'. THE MATERIALS MAY CONTAIN KNOWN AND UNKNOWN VIOLATIONS OR DEVIATIONS OF INDUSTRY STANDARDS AND SPECIFICATIONS. NVIDIA MAKES NO WARRANTIES, EXPRESSED, IMPLIED, STATUTORY OR OTHERWISE WITH RESPECT TO THE MATERIALS OR OTHERWISE, AND EXPRESSLY DISCLAIMS ALL IMPLIED WARRANTIES INCLUDING, WITHOUT LIMITATION, THE WARRANTIES OF DESIGN, OF NONINFRINGEMENT, MERCHANTABILITY OR FITNESS FOR A PARTICULAR PURPOSE, OR ARISING FROM A COURSE OF DEALING, TRADE USAGE, TRADE PRACTICE, OR INDUSTRY STANDARDS.

ASSEMBLY	<ASSEMBLY_DESCRIPTION>
PAGE DETAIL	Block Diagram

NVIDIA CORPORATION
2701 SAN TOMAS EXPRESSWAY
SANTA CLARA, CA 95050, USA

NV_PN	600-82597-BASE-900		
PCB REV	P2597-C02	PAGE	2 OF 34
BOM REV	A	DATE	23-OCT-2017

Power Tree

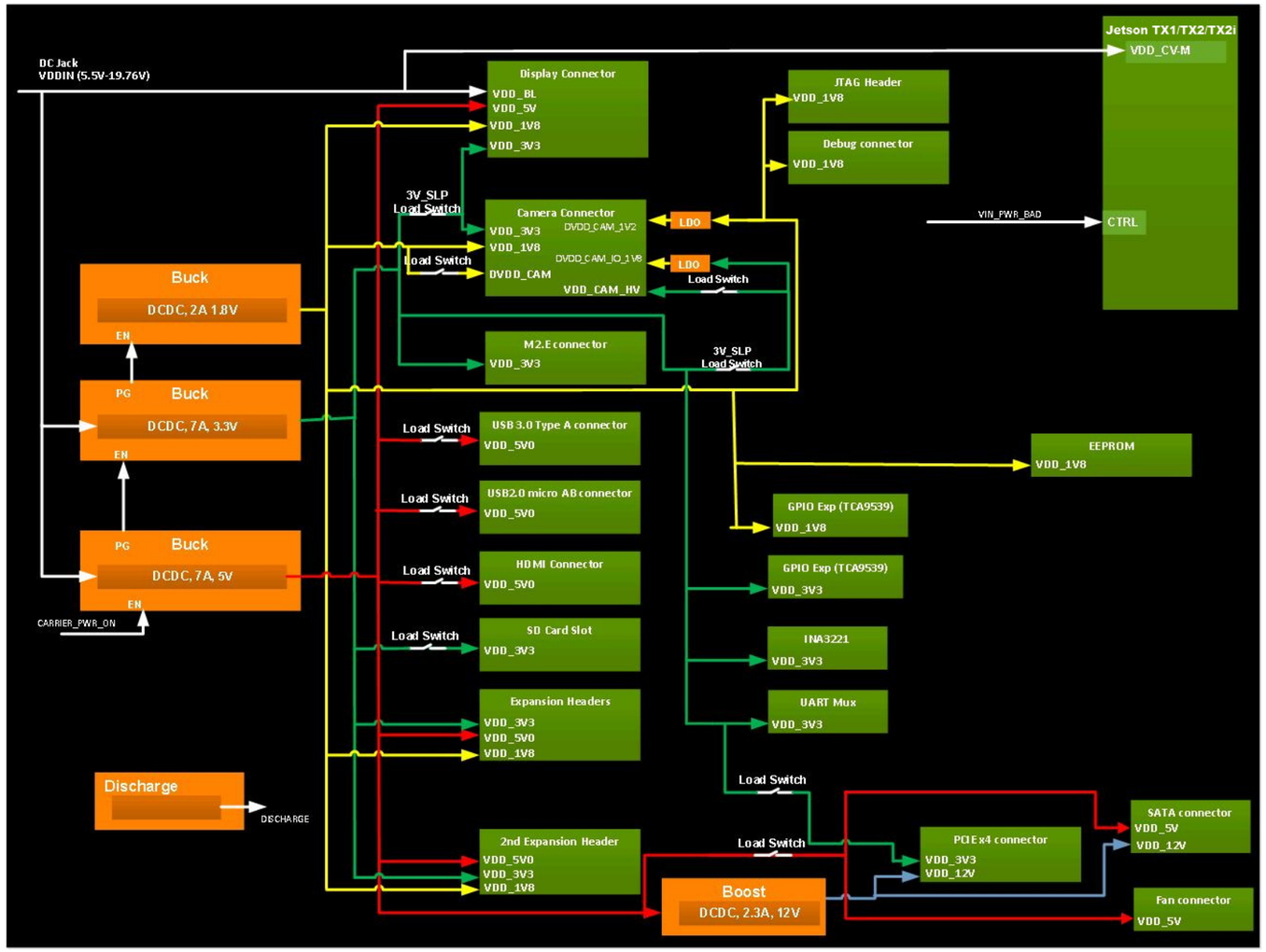

ASSEMBLY	<ASSEMBLY_DESCRIPTION>
PAGE DETAIL	Power Tree

ALL NVIDIA DESIGN SPECIFICATIONS, REFERENCE SPECIFICATIONS, REFERENCE BOARDS, FILES, DRAWINGS, DIAGNOSTICS, LISTS AND OTHER DOCUMENTS OR INFORMATION (TOGETHER AND SEPARATELY, "MATERIALS") ARE BEING PROVIDED "AS IS". THE MATERIALS MAY CONTAIN KNOWN AND UNKNOWN VIOLATIONS OR DEVIATIONS OF INDUSTRY STANDARDS AND SPECIFICATIONS. NVIDIA MAKES NO WARRANTIES, EXPRESSED, IMPLIED, STATUTORY OR OTHERWISE WITH RESPECT TO THE MATERIALS OR OTHERWISE, AND EXPRESSLY DISCLAIMS ALL IMPLIED WARRANTIES INCLUDING, WITHOUT LIMITATION, THE WARRANTIES OF DESIGN, OF NONINFRINGEMENT, MERCHANTABILITY OR FITNESS FOR A PARTICULAR PURPOSE, OR ARISING FROM A COURSE OF DEALING, TRADE USAGE, TRADE PRACTICE, OR INDUSTRY STANDARDS.

NVIDIA CORPORATION
2701 SAN TOMAS EXPRESSWAY
SANTA CLARA, CA 95050, USA

NV_PN	600-82597-BASE-900		
PCB REV	P2597-C02	PAGE	3 OF 34
BOM REV	A	DATE	23-OCT-2017

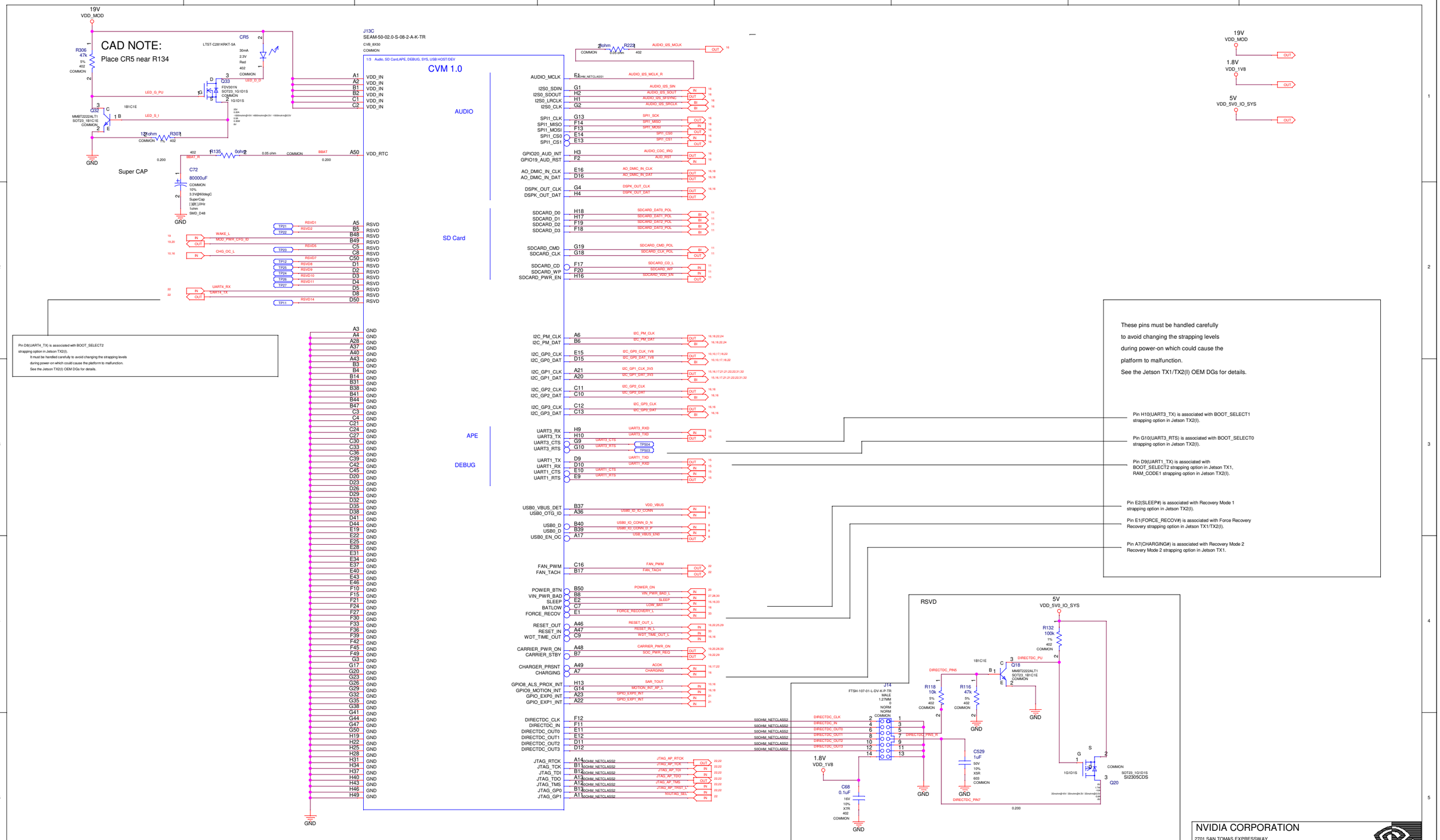

ASSEMBLY	<ASSEMBLY_DESCRIPTION>
PAGE DETAIL	IO connector 1/3

ALL NVIDIA DESIGN SPECIFICATIONS, REFERENCE SPECIFICATIONS, REFERENCE BOARDS, FILES, DRAWINGS, DIAGNOSTICS, LISTS AND OTHER DOCUMENTS OR INFORMATION (TOGETHER AND SEPARATELY, 'MATERIALS') ARE BEING PROVIDED 'AS IS'. THE MATERIALS MAY CONTAIN KNOWN AND UNKNOWN VIOLATIONS OR DEVIATIONS OF INDUSTRY STANDARDS AND SPECIFICATIONS. NVIDIA MAKES NO WARRANTIES, EXPRESSED, IMPLIED, STATUTORY OR OTHERWISE WITH RESPECT TO THE MATERIALS OR OTHERWISE, AND EXPRESSLY DISCLAIMS ALL IMPLIED WARRANTIES INCLUDING, WITHOUT LIMITATION, THE WARRANTIES OF DESIGN, OF NONINFRINGEMENT, MERCHANTABILITY OR FITNESS FOR A PARTICULAR PURPOSE, OR ARISING FROM A COURSE OF DEALING, TRADE USAGE, TRADE PRACTICE, OR INDUSTRY STANDARDS.

NVIDIA CORPORATION
2701 SAN TOMAS EXPRESSWAY
SANTA CLARA, CA 95050, USA

NV_PN	600-82597-BASE-900		
PCB REV	P2597-C02	PAGE	4 OF 34
BOM REV	A	DATE	23-OCT-2017

J13A
SEAM-50-02.0-S-08-2-A-K-TR
CVB_8X50
COMMON

2/3 CSI, DSI, EDP, HDMI, TOUCH

CVM 1.0

DP0 / HDMI0

Signal	Pin	Net	Dir	Pin	Signal
EDP_TXD3_P	H36	DP0_TX3	OUT		HDMI0_TXC
EDP_TXD3_N	H35	DP0_TX3	OUT		HDMI0_TXC
EDP_TXD2_P	G37	DP0_TX2	OUT		HDMI0_TX0
EDP_TXD2_N	G36	DP0_TX2	OUT		HDMI0_TX0
EDP_TXD1_P	F38	DP0_TX1	OUT		HDMI0_TX1
EDP_TXD1_N	F37	DP0_TX1	OUT		HDMI0_TX1
EDP_TXD0_P	H39	DP0_TX0	OUT		HDMI0_TX2
EDP_TXD0_N	H38	DP0_TX0	OUT		HDMI0_TX2
EDP_AUX_CH0_P	B35	DP0_AUX_CH	BI		
EDP_AUX_CH0_N	B34	DP0_AUX_CH	BI		
DP_HPD0_AP	B36	DP0_HPD	IN		

DP1 / HDMI1

Signal	Pin	Net	Dir	Pin	Signal
DP1_TXD3_P	E36	DP1_TX3	OUT		HDMI1_TXC
DP1_TXD3_N	E35	DP1_TX3	OUT		HDMI1_TXC
DP1_TXD2_P	D37	DP1_TX2	OUT		HDMI1_TX0
DP1_TXD2_N	D36	DP1_TX2	OUT		HDMI1_TX0
DP1_TXD1_P	C38	DP1_TX1	OUT		HDMI1_TX1
DP1_TXD1_N	C37	DP1_TX1	OUT		HDMI1_TX1
DP1_TXD0_P	E39	DP1_TX0	OUT		HDMI1_TX2
DP1_TXD0_N	E38	DP1_TX0	OUT		HDMI1_TX2
HDMI_DDC_SCL_POL	A35	DP1_AUX_CH	BI		
HDMI_DDC_SDA_POL	A34	DP1_AUX_CH	BI		
HDMI_HPD	A33	DP1_HPD	IN		
HDMI_CEC	B33	HDMI_CEC	BI		

TO DISPLAY MODULE

SPI TOUCH
SPI4 (Tegra X1)

Signal	Pin	Net	Dir	Pin	Signal
SPI0_CLK	E3	SPI0_CLK	OUT		
SPI0_MISO	E4	SPI0_MISO	IN		
SPI0_MOSI	F4	SPI0_MOSI	OUT		
SPI0_CS0	F3	SPI0_CS0	OUT		
TOUCH_INT	B25	GPIO6_TOUCH_INT	IN		
TOUCH_RST	B23	GPIO7_TOUCH_RST	OUT		
TOUCH_CLK	B24	TOUCH_CLK	OUT		
LCD_EN	B26	LCD_VDD_EN	OUT		
LCD_BL_EN	B28	LCD_BKLT_EN	OUT		
LCD_BL_PWM	B27	LCD0_BKLT_PWM	OUT		
LCD1_BKLT_PWM	A24	LCD1_BKLT_PWM	OUT		
LCD_TE	A25	LCD_TE	IN		
GS_H	A26	GSYNC_HSYNC	OUT		
GS_V	A27	GSYNC_VSYNC	OUT		

Signal	Pin	Net	Dir	Pin	Signal
I2C_CAM_CLK	C6	CAM_I2C_SCL	BI		
I2C_CAM_DAT	D6	CAM_I2C_SDA	BI		
CAM0_MCLK	F9	CAM0_MCLK	OUT		
GPIO0_CAM0_PWR	G8	CAM0_PWDN	OUT		
GPIO2_CAM0_RST	H8	CAM0_RST_L	OUT		
GPIO4_CAM_STROBE	G7	FLASH_STROBE	OUT		
GPIO5_CAM_FLASH_EN	D7	FLASH_EN	OUT		
CAM_VSYNC	E8	CAM_VSYNC	OUT		
CAM1_MCLK	F8	CAM1_MCLK	OUT		
GPIO1_CAM1_PWR	F7	CAM1_PWDN	OUT		
GPIO3_CAM1_RST	H7	CAM1_RST_L	OUT		
CAM2_MCLK	E7	CAM2_MCLK	OUT		
CSI0_CLK	G28	CON_CSI_A_CLK_P	IN		
CSI0_CLK	G27	CON_CSI_A_CLK_N	IN		
CSI0_D0	F29	CON_CSI_A_D0_P	IN		
CSI0_D0	F28	CON_CSI_A_D0_N	IN		
CSI0_D1	H27	CON_CSI_A_D1_P	IN		
CSI0_D1	H26	CON_CSI_A_D1_N	IN		
CSI1_CLK	D28	CON_CSI_B_CLK_P	IN		
CSI1_CLK	D27	CON_CSI_B_CLK_N	IN		
CSI1_D0	C29	CON_CSI_B_D0_P	IN		
CSI1_D0	C28	CON_CSI_B_D0_N	IN		
CSI1_D1	E27	CON_CSI_B_D1_P	IN		
CSI1_D1	E26	CON_CSI_B_D1_N	IN		
CSI2_CLK	G25	CON_CSI_C_CLK_P	IN		
CSI2_CLK	G24	CON_CSI_C_CLK_N	IN		
CSI2_D0	F26	CON_CSI_C_D0_P	IN		
CSI2_D0	F25	CON_CSI_C_D0_N	IN		
CSI2_D1	H24	CON_CSI_C_D1_P	IN		
CSI2_D1	H23	CON_CSI_C_D1_N	IN		
CSI3_CLK	D25	CON_CSI_D_CLK_P	IN		
CSI3_CLK	D24	CON_CSI_D_CLK_N	IN		
CSI3_D0	C26	CON_CSI_D_D0_P	IN		
CSI3_D0	C25	CON_CSI_D_D0_N	IN		
CSI3_D1	E24	CON_CSI_D_D1_P	IN		
CSI3_D1	E23	CON_CSI_D_D1_N	IN		
CSI4_CLK	G22	CON_CSI_E_CLK_P	IN		
CSI4_CLK	G21	CON_CSI_E_CLK_N	IN		
CSI4_D0	F23	CON_CSI_E_D0_P	IN		
CSI4_D0	F22	CON_CSI_E_D0_N	IN		
CSI4_D1	H21	CON_CSI_E_D1_P	IN		
CSI4_D1	H20	CON_CSI_E_D1_N	IN		
CSI5_CLK	D22	CON_CSI_F_CLK_P	IN		
CSI5_CLK	D21	CON_CSI_F_CLK_N	IN		
CSI5_D0	C23	CON_CSI_F_D0_P	IN		
CSI5_D0	C22	CON_CSI_F_D0_N	IN		
CSI5_D1	E21	CON_CSI_F_D1_P	IN		
CSI5_D1	E20	CON_CSI_F_D1_N	IN		
DSI0_CLK	G33	CON_DSI_A_CLK_P	OUT		
DSI0_CLK	G34	CON_DSI_A_CLK_N	OUT		
DSI0_D0	F34	CON_DSI_A_D0_P	OUT		
DSI0_D0	F35	CON_DSI_A_D0_N	OUT		
DSI0_D1	H32	CON_DSI_A_D1_P	OUT		
DSI0_D1	H33	CON_DSI_A_D1_N	OUT		
DSI1_CLK	D33	CON_DSIB_CLK_P	OUT		
DSI1_CLK	D34	CON_DSIB_CLK_N	OUT		
DSI1_D0	C34	CON_DSI_A_D2_P	OUT		
DSI1_D0	C35	CON_DSI_A_D2_N	OUT		
DSI1_D1	E32	CON_DSI_A_D3_P	OUT		
DSI1_D1	E33	CON_DSI_A_D3_N	OUT		
DSI2_CLK	G30	CON_DSI_B_CLK_P	OUT		
DSI2_CLK	G31	CON_DSI_B_CLK_N	OUT		
DSI2_D0	F31	CON_DSI_B_D0_P	OUT		
DSI2_D0	F32	CON_DSI_B_D0_N	OUT		
DSI2_D1	H29	CON_DSI_B_D1_P	OUT		
DSI2_D1	H30	CON_DSI_B_D1_N	OUT		
DSI3_CLK	D30	CON_DSI4_CLK_P	OUT		
DSI3_CLK	D31	CON_DSI4_CLK_N	OUT		
DSI3_D0	C31	CON_DSI_B_D2_P	OUT		
DSI3_D0	C32	CON_DSI_B_D2_N	OUT		
DSI3_D1	E29	CON_DSI_B_D3_P	OUT		
DSI3_D1	E30	CON_DSI_B_D3_N	OUT		

ASSEMBLY	<ASSEMBLY_DESCRIPTION>
PAGE DETAIL	IO connector 2/3

ALL NVIDIA DESIGN SPECIFICATIONS, REFERENCE SPECIFICATIONS, REFERENCE BOARDS, FILES, DRAWINGS, DIAGNOSTICS, LISTS AND OTHER DOCUMENTS OR INFORMATION (TOGETHER AND SEPARATELY, "MATERIALS") ARE BEING PROVIDED "AS IS". THE MATERIALS MAY CONTAIN KNOWN AND UNKNOWN VIOLATIONS OR DEVIATIONS OF INDUSTRY STANDARDS AND SPECIFICATIONS. NVIDIA MAKES NO WARRANTIES, EXPRESSED, IMPLIED, STATUTORY OR OTHERWISE WITH RESPECT TO THE MATERIALS OR OTHERWISE, AND EXPRESSLY DISCLAIMS ALL IMPLIED WARRANTIES INCLUDING, WITHOUT LIMITATION, THE WARRANTIES OF DESIGN, OF NONINFRINGEMENT, MERCHANTABILITY OR FITNESS FOR A PARTICULAR PURPOSE, OR ARISING FROM A COURSE OF DEALING, TRADE USAGE, TRADE PRACTICE, OR INDUSTRY STANDARDS.

NVIDIA CORPORATION
2701 SAN TOMAS EXPRESSWAY
SANTA CLARA, CA 95050, USA

NV_PN	600-82597-BASE-900		
PCB REV	P2597-C02	PAGE	5 OF 34
BOM REV	A	DATE	23-OCT-2017

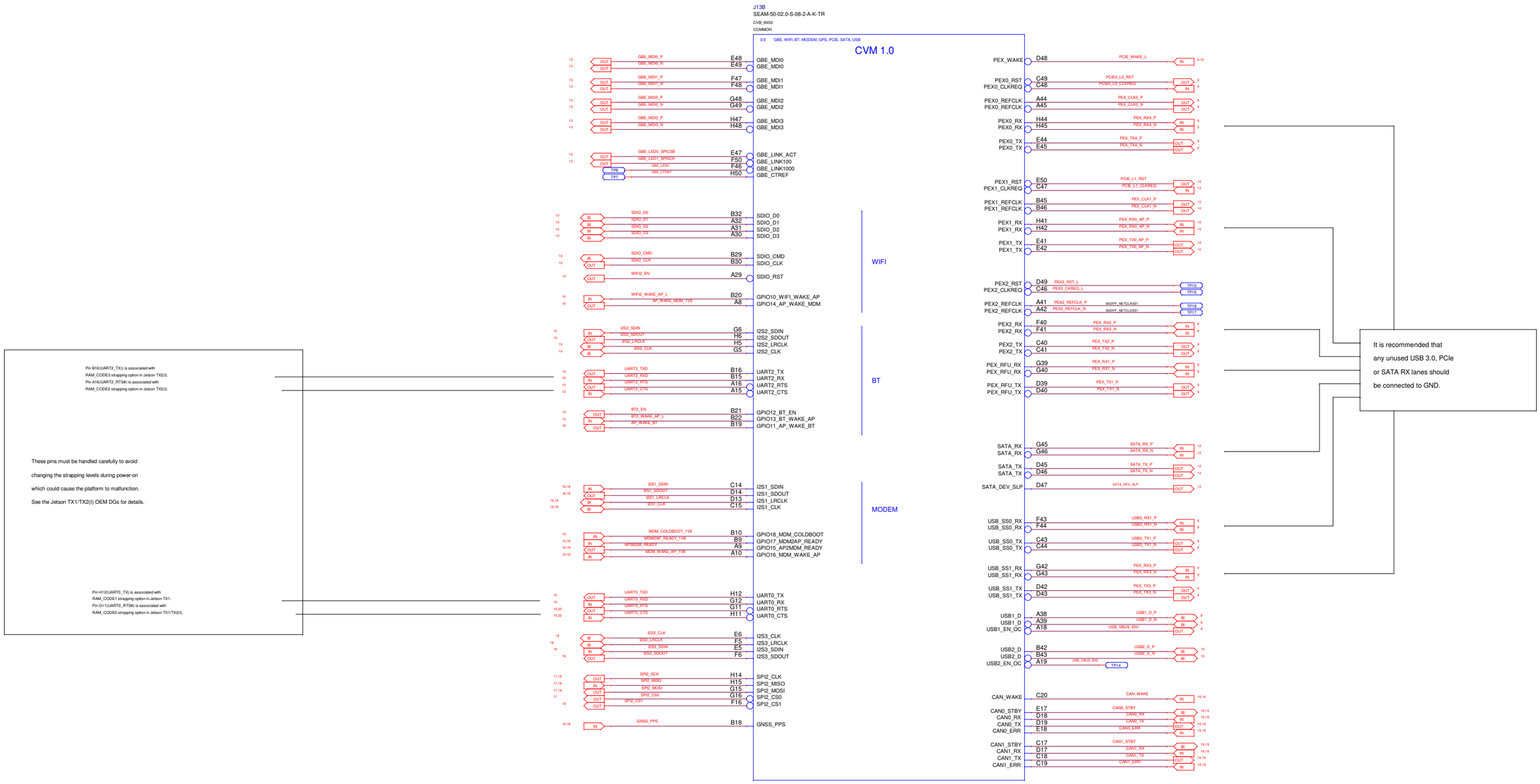

ASSEMBLY	<ASSEMBLY_DESCRIPTION>
PAGE DETAIL	IO connector 3/3

ALL NVIDIA DESIGN SPECIFICATIONS, REFERENCE SPECIFICATIONS, REFERENCE BOARDS, FILES, DRAWINGS, DIAGNOSTICS, LISTS AND OTHER DOCUMENTS OR INFORMATION (TOGETHER AND SEPARATELY, 'MATERIALS') ARE BEING PROVIDED 'AS IS'. THE MATERIALS MAY CONTAIN KNOWN AND UNKNOWN VIOLATIONS OR DEVIATIONS OF INDUSTRY STANDARDS AND SPECIFICATIONS. NVIDIA MAKES NO WARRANTIES, EXPRESSED, IMPLIED, STATUTORY OR OTHERWISE WITH RESPECT TO THE MATERIALS OR OTHERWISE, AND EXPRESSLY DISCLAIMS ALL IMPLIED WARRANTIES INCLUDING, WITHOUT LIMITATION, THE WARRANTIES OF DESIGN, OF NONINFRINGEMENT, MERCHANTABILITY OR FITNESS FOR A PARTICULAR PURPOSE, OR ARISING FROM A COURSE OF DEALING, TRADE USAGE, TRADE PRACTICE, OR INDUSTRY STANDARDS.

NVIDIA CORPORATION
2701 SAN TOMAS EXPRESSWAY
SANTA CLARA, CA 95050, USA

NV_PN	600-82597-BASE-900		
PCB REV	P2597-C02	PAGE	6 OF 34
BOM REV	A	DATE	23-OCT-2017

BLANK

ASSEMBLY	<ASSEMBLY_DESCRIPTION>
PAGE DETAIL	BLANK

ALL NVIDIA DESIGN SPECIFICATIONS, REFERENCE SPECIFICATIONS, REFERENCE BOARDS, FILES, DRAWINGS, DIAGNOSTICS, LISTS AND OTHER DOCUMENTS OR INFORMATION (TOGETHER AND SEPARATELY, 'MATERIALS') ARE BEING PROVIDED 'AS IS'. THE MATERIALS MAY CONTAIN KNOWN AND UNKNOWN VIOLATIONS OR DEVIATIONS OF INDUSTRY STANDARDS AND SPECIFICATIONS. NVIDIA MAKES NO WARRANTIES, EXPRESSED, IMPLIED, STATUTORY OR OTHERWISE WITH RESPECT TO THE MATERIALS OR OTHERWISE, AND EXPRESSLY DISCLAIMS ALL IMPLIED WARRANTIES INCLUDING, WITHOUT LIMITATION, THE WARRANTIES OF DESIGN, OF NONINFRINGEMENT, MERCHANTABILITY OR FITNESS FOR A PARTICULAR PURPOSE, OR ARISING FROM A COURSE OF DEALING, TRADE USAGE, TRADE PRACTICE, OR INDUSTRY STANDARDS.

NVIDIA CORPORATION
2701 SAN TOMAS EXPRESSWAY
SANTA CLARA, CA 95050, USA

NV_PN	600-82597-BASE-900		
PCB REV	P2597-C02	PAGE	7 OF 34
BOM REV	A	DATE	23-OCT-2017

USB 3.0 TYPE A CONNECTOR

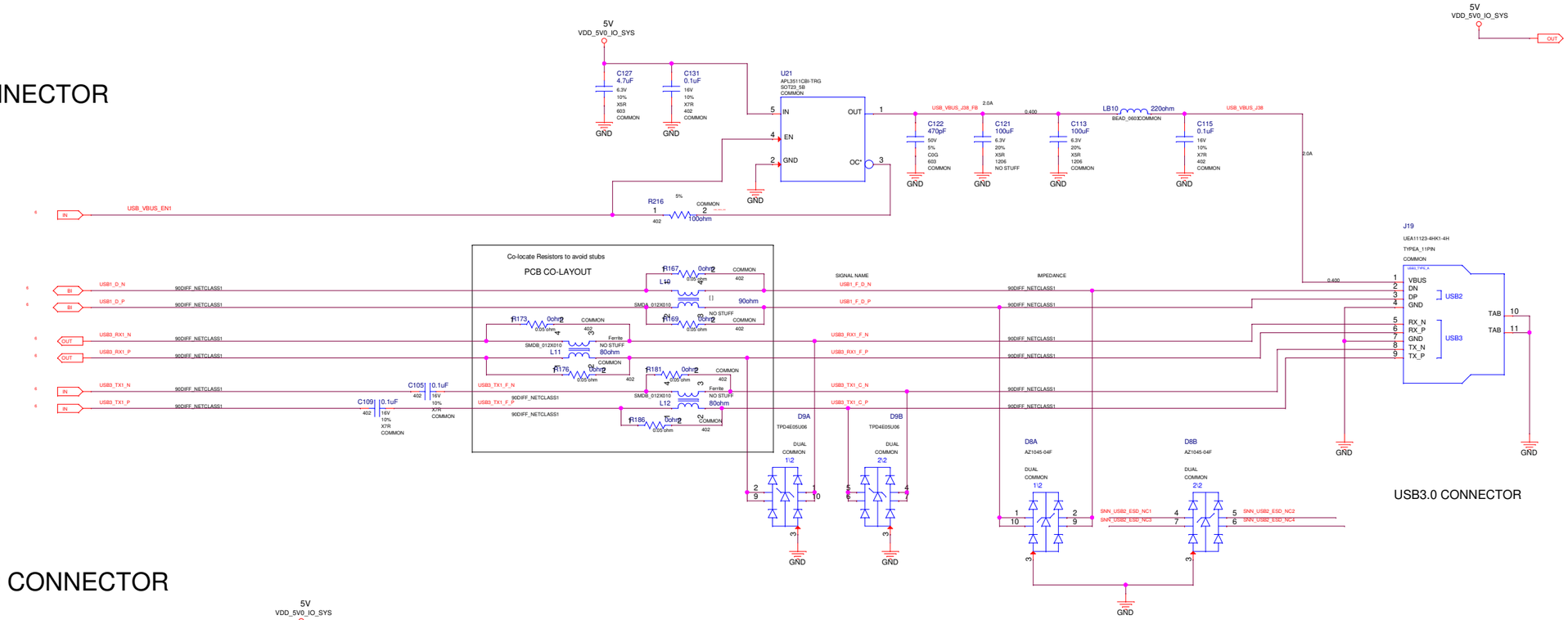

MICRO AB USB 2.0 CONNECTOR

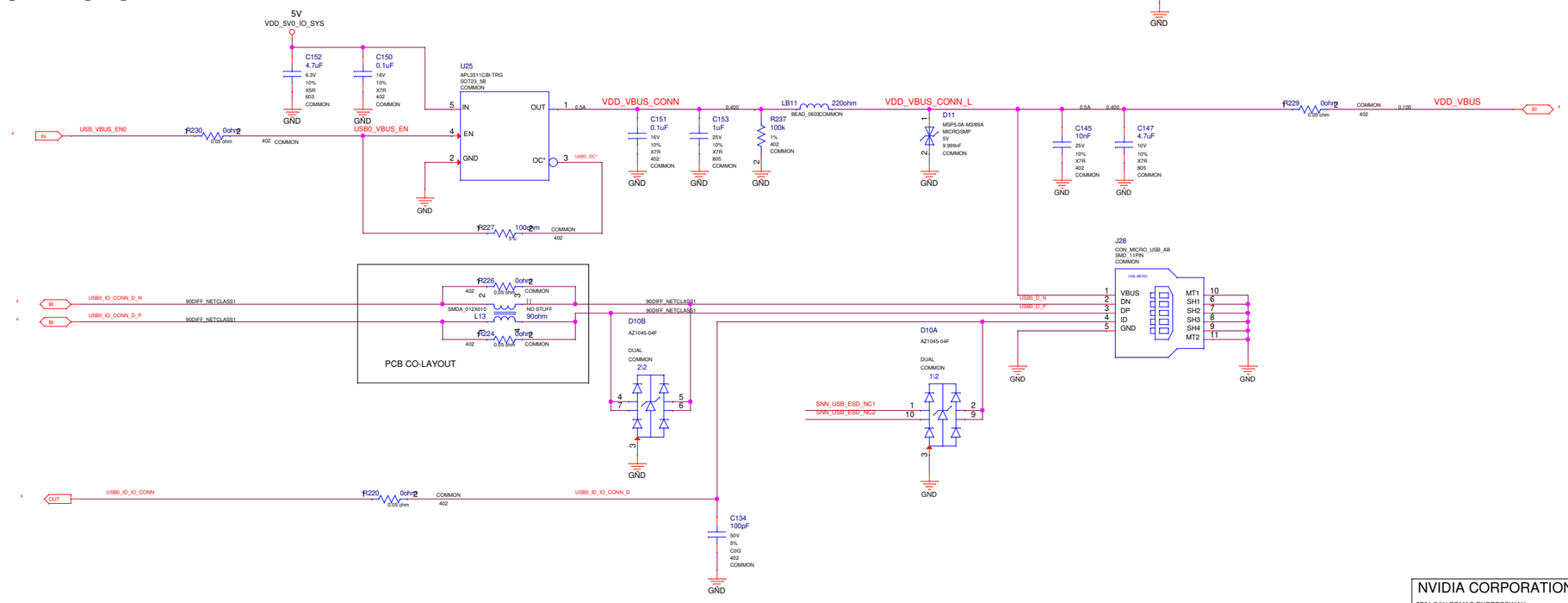

ASSEMBLY	<ASSEMBLY_DESCRIPTION>
PAGE DETAIL	USB3.0 type A and USB2.0 micro

ALL NVIDIA DESIGN SPECIFICATIONS, REFERENCE SPECIFICATIONS, REFERENCE BOARDS, FILES, DRAWINGS, DIAGNOSTICS, LISTS AND OTHER DOCUMENTS OR INFORMATION (TOGETHER AND SEPARATELY, "MATERIALS") ARE BEING PROVIDED "AS IS". THE MATERIALS MAY CONTAIN KNOWN AND UNKNOWN VIOLATIONS OR DEVIATIONS OF INDUSTRY STANDARDS AND SPECIFICATIONS. NVIDIA MAKES NO WARRANTIES, EXPRESSED, IMPLIED, STATUTORY OR OTHERWISE WITH RESPECT TO THE MATERIALS OR OTHERWISE, AND EXPRESSLY DISCLAIMS ALL IMPLIED WARRANTIES INCLUDING, WITHOUT LIMITATION, THE WARRANTIES OF DESIGN, OF NONINFRINGEMENT, MERCHANTABILITY OR FITNESS FOR A PARTICULAR PURPOSE, OR ARISING FROM A COURSE OF DEALING, TRADE USAGE, TRADE PRACTICE, OR INDUSTRY STANDARDS.

NVIDIA CORPORATION
2701 SAN TOMAS EXPRESSWAY
SANTA CLARA, CA 95050, USA

NV_PN	600-82597-BASE-900		
PCB REV	P2597-C02	PAGE	8 OF 34
BOM REV	A	DATE	23-OCT-2017

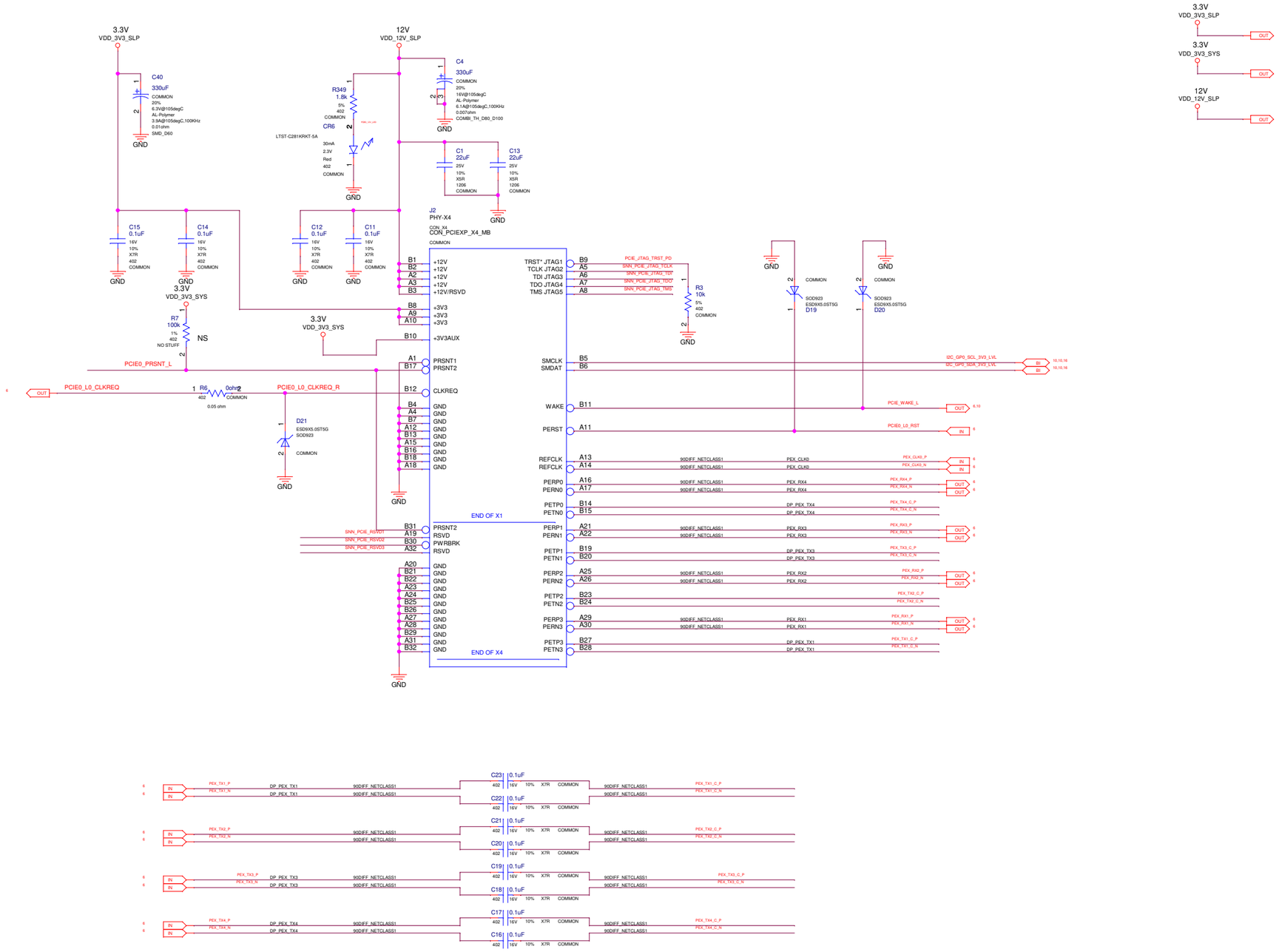

ASSEMBLY	<ASSEMBLY_DESCRIPTION>
PAGE DETAIL	PCIe x4 Connector

ALL NVIDIA DESIGN SPECIFICATIONS, REFERENCE SPECIFICATIONS, REFERENCE BOARDS, FILES, DRAWINGS, DIAGNOSTICS, LISTS AND OTHER DOCUMENTS OR INFORMATION (TOGETHER AND SEPARATELY, 'MATERIALS') ARE BEING PROVIDED 'AS IS'. THE MATERIALS MAY CONTAIN KNOWN AND UNKNOWN VIOLATIONS OR DEVIATIONS OF INDUSTRY STANDARDS AND SPECIFICATIONS. NVIDIA MAKES NO WARRANTIES, EXPRESSED, IMPLIED, STATUTORY OR OTHERWISE WITH RESPECT TO THE MATERIALS OR OTHERWISE, AND EXPRESSLY DISCLAIMS ALL IMPLIED WARRANTIES INCLUDING, WITHOUT LIMITATION, THE WARRANTIES OF DESIGN, OF NONINFRINGEMENT, MERCHANTABILITY OR FITNESS FOR A PARTICULAR PURPOSE, OR ARISING FROM A COURSE OF DEALING, TRADE USAGE, TRADE PRACTICE, OR INDUSTRY STANDARDS.

NVIDIA CORPORATION
2701 SAN TOMAS EXPRESSWAY
SANTA CLARA, CA 95050, USA

NV_PN	600-82597-BASE-900		
PCB REV	P2597-C02	PAGE	9 OF 34
BOM REV	A	DATE	23-OCT-2017

M.2 KEY E

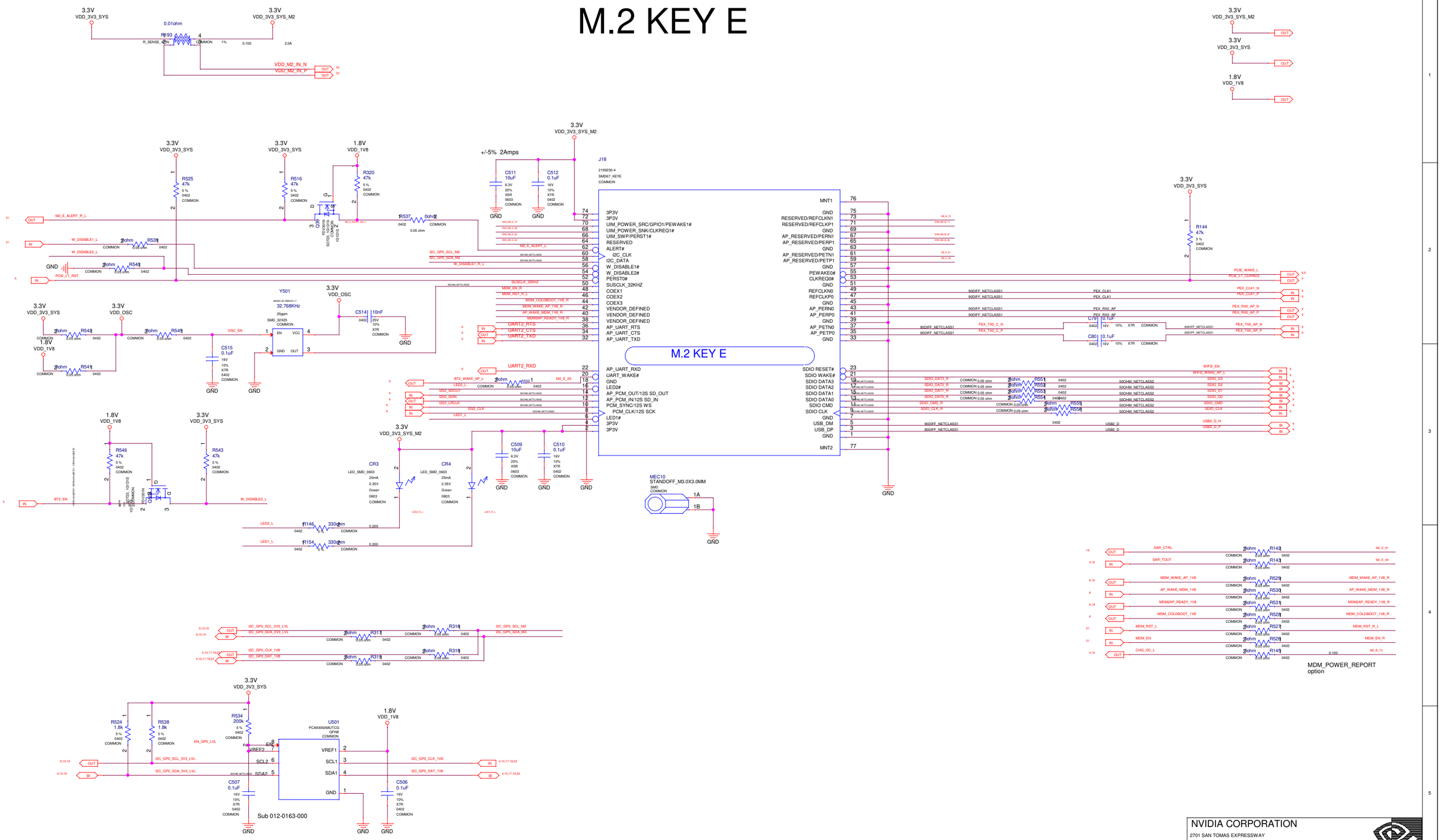

ALL NVIDIA DESIGN SPECIFICATIONS, REFERENCE SPECIFICATIONS, REFERENCE BOARDS, FILES, DRAWINGS, DIAGNOSTICS, LISTS AND OTHER DOCUMENTS OR INFORMATION (TOGETHER AND SEPARATELY, 'MATERIALS') ARE BEING PROVIDED 'AS IS'. THE MATERIALS MAY CONTAIN KNOWN AND UNKNOWN VIOLATIONS OR DEVIATIONS OF INDUSTRY STANDARDS AND SPECIFICATIONS. NVIDIA MAKES NO WARRANTIES, EXPRESSED, IMPLIED, STATUTORY OR OTHERWISE WITH RESPECT TO THE MATERIALS OR OTHERWISE, AND EXPRESSLY DISCLAIMS ALL IMPLIED WARRANTIES INCLUDING, WITHOUT LIMITATION, THE WARRANTIES OF DESIGN, OF NONINFRINGEMENT, MERCHANTABILITY OR FITNESS FOR A PARTICULAR PURPOSE, OR ARISING FROM A COURSE OF DEALING, TRADE USAGE, TRADE PRACTICE, OR INDUSTRY STANDARDS.

ASSEMBLY	<ASSEMBLY_DESCRIPTION>
PAGE DETAIL	M.2 KEY E

NVIDIA CORPORATION
2701 SAN TOMAS EXPRESSWAY
SANTA CLARA, CA 95050, USA

NV_PN	600-82597-BASE-900		
PCB REV	P2597-C02	PAGE	10 OF 34
BOM REV	A	DATE	23-OCT-2017

SD CARD SOCKET

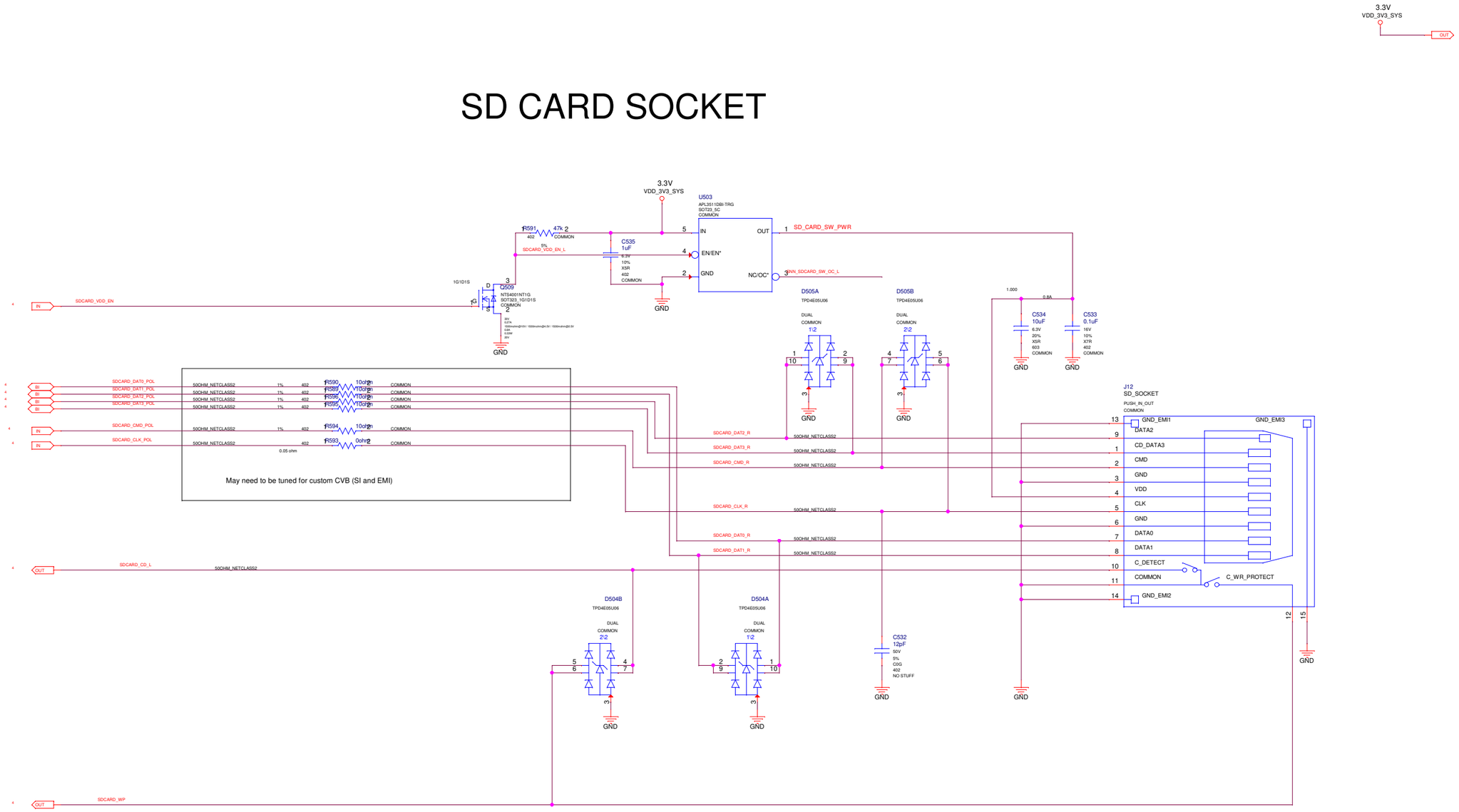

ASSEMBLY	<ASSEMBLY_DESCRIPTION>
PAGE DETAIL	SDcard Slot

ALL NVIDIA DESIGN SPECIFICATIONS, REFERENCE SPECIFICATIONS, REFERENCE BOARDS, FILES, DRAWINGS, DIAGNOSTICS, LISTS AND OTHER DOCUMENTS OR INFORMATION (TOGETHER AND SEPARATELY, "MATERIALS") ARE BEING PROVIDED "AS IS". THE MATERIALS MAY CONTAIN KNOWN AND UNKNOWN VIOLATIONS OR DEVIATIONS OF INDUSTRY STANDARDS AND SPECIFICATIONS. NVIDIA MAKES NO WARRANTIES, EXPRESSED, IMPLIED, STATUTORY OR OTHERWISE WITH RESPECT TO THE MATERIALS OR OTHERWISE, AND EXPRESSLY DISCLAIMS ALL IMPLIED WARRANTIES INCLUDING, WITHOUT LIMITATION, THE WARRANTIES OF DESIGN, OF NONINFRINGEMENT, MERCHANTABILITY OR FITNESS FOR A PARTICULAR PURPOSE, OR ARISING FROM A COURSE OF DEALING, TRADE USAGE, TRADE PRACTICE, OR INDUSTRY STANDARDS.

NVIDIA CORPORATION
2701 SAN TOMAS EXPRESSWAY
SANTA CLARA, CA 95050, USA

NV_PN	600-82597-BASE-900		
PCB REV	P2597-C02	PAGE	11 OF 34
BOM REV	A	DATE	23-OCT-2017

SATA Connector

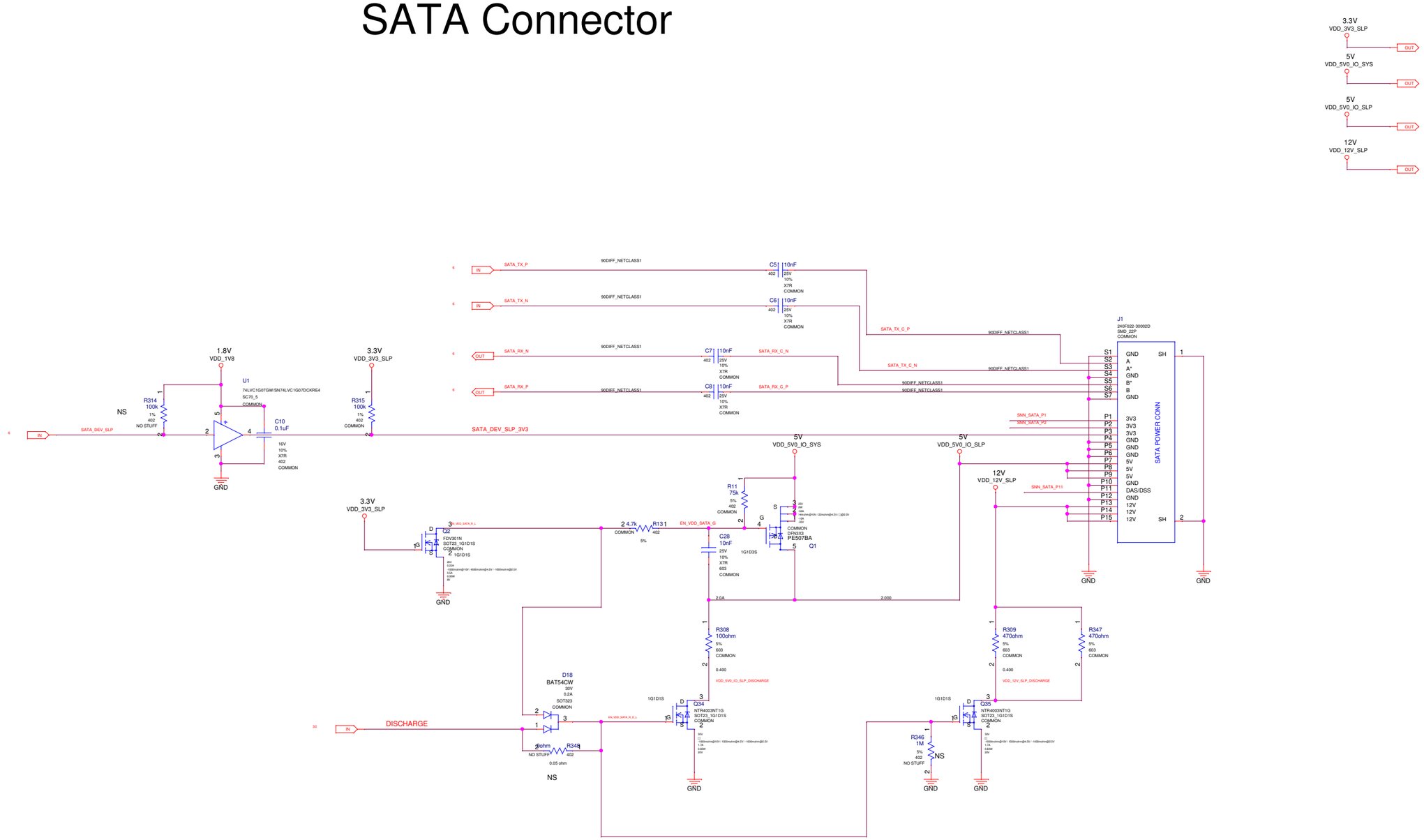

ASSEMBLY	<ASSEMBLY_DESCRIPTION>
PAGE DETAIL	SATA

ALL NVIDIA DESIGN SPECIFICATIONS, REFERENCE SPECIFICATIONS, REFERENCE BOARDS, FILES, DRAWINGS, DIAGNOSTICS, LISTS AND OTHER DOCUMENTS OR INFORMATION (TOGETHER AND SEPARATELY, 'MATERIALS') ARE BEING PROVIDED 'AS IS'. THE MATERIALS MAY CONTAIN KNOWN AND UNKNOWN VIOLATIONS OR DEVIATIONS OF INDUSTRY STANDARDS AND SPECIFICATIONS. NVIDIA MAKES NO WARRANTIES, EXPRESSED, IMPLIED, STATUTORY OR OTHERWISE WITH RESPECT TO THE MATERIALS OR OTHERWISE, AND EXPRESSLY DISCLAIMS ALL IMPLIED WARRANTIES INCLUDING, WITHOUT LIMITATION, THE WARRANTIES OF DESIGN, OF NONINFRINGEMENT, MERCHANTABILITY OR FITNESS FOR A PARTICULAR PURPOSE, OR ARISING FROM A COURSE OF DEALING, TRADE USAGE, TRADE PRACTICE, OR INDUSTRY STANDARDS.

NVIDIA CORPORATION
2701 SAN TOMAS EXPRESSWAY
SANTA CLARA, CA 95050, USA

NV_PN	600-82597-BASE-900		
PCB REV	P2597-C02	PAGE	12 OF 34
BOM REV	A	DATE	23-OCT-2017

Gigiabit Ethernet

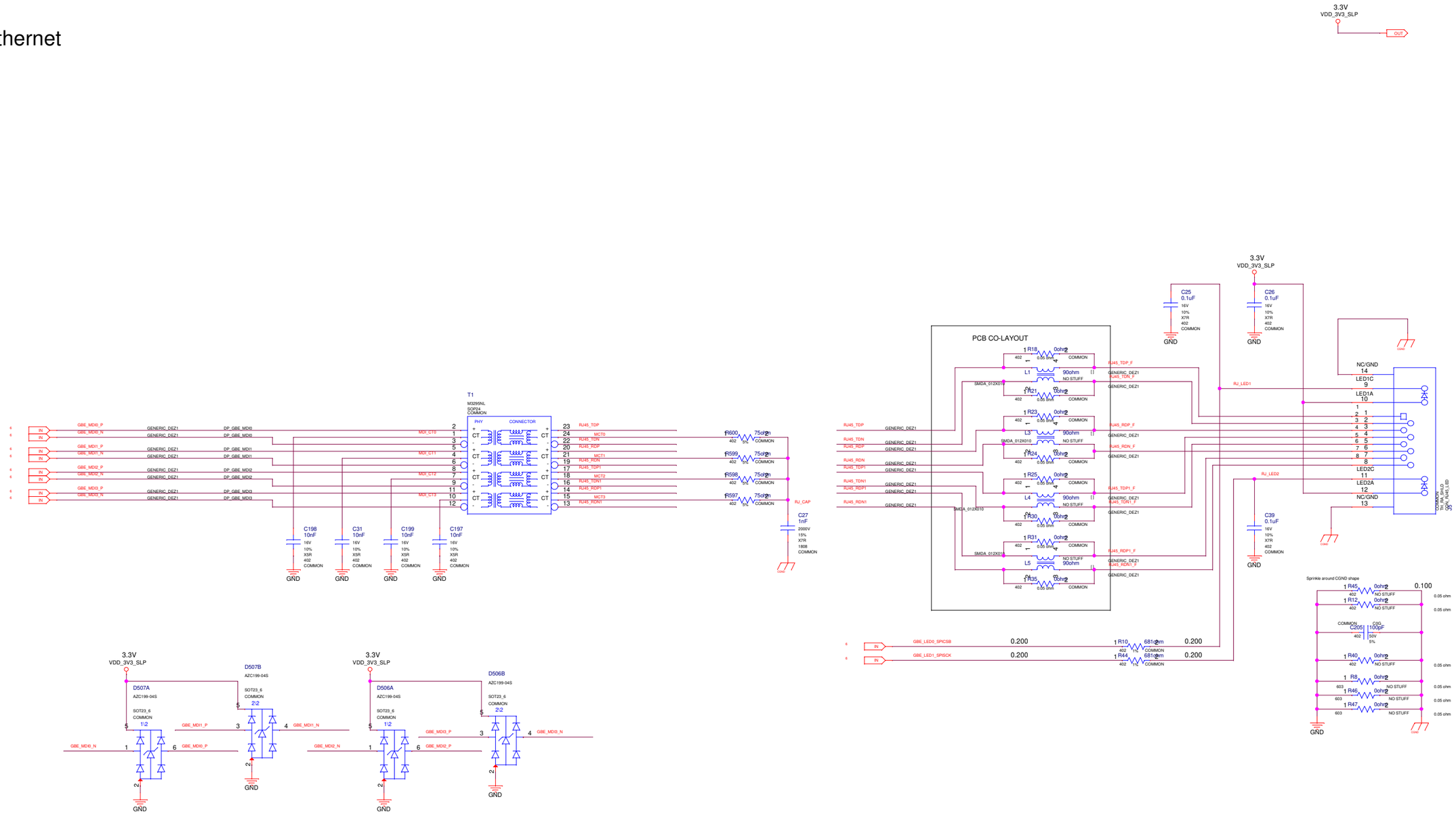

ASSEMBLY	<ASSEMBLY_DESCRIPTION>
PAGE DETAIL	Gigabit Ethernet

ALL NVIDIA DESIGN SPECIFICATIONS, REFERENCE SPECIFICATIONS, REFERENCE BOARDS, FILES, DRAWINGS, DIAGNOSTICS, LISTS AND OTHER DOCUMENTS OR INFORMATION (TOGETHER AND SEPARATELY, 'MATERIALS') ARE BEING PROVIDED 'AS IS'. THE MATERIALS MAY CONTAIN KNOWN AND UNKNOWN VIOLATIONS OR DEVIATIONS OF INDUSTRY STANDARDS AND SPECIFICATIONS. NVIDIA MAKES NO WARRANTIES, EXPRESSED, IMPLIED, STATUTORY OR OTHERWISE WITH RESPECT TO THE MATERIALS OR OTHERWISE, AND EXPRESSLY DISCLAIMS ALL IMPLIED WARRANTIES INCLUDING, WITHOUT LIMITATION, THE WARRANTIES OF DESIGN, OF NONINFRINGEMENT, MERCHANTABILITY OR FITNESS FOR A PARTICULAR PURPOSE, OR ARISING FROM A COURSE OF DEALING, TRADE USAGE, TRADE PRACTICE, OR INDUSTRY STANDARDS.

NVIDIA CORPORATION
2701 SAN TOMAS EXPRESSWAY
SANTA CLARA, CA 95050, USA

NV_PN	600-82597-BASE-900		
PCB REV	P2597-C02	PAGE	13 OF 34
BOM REV	A	DATE	23-OCT-2017

HDMI Connector

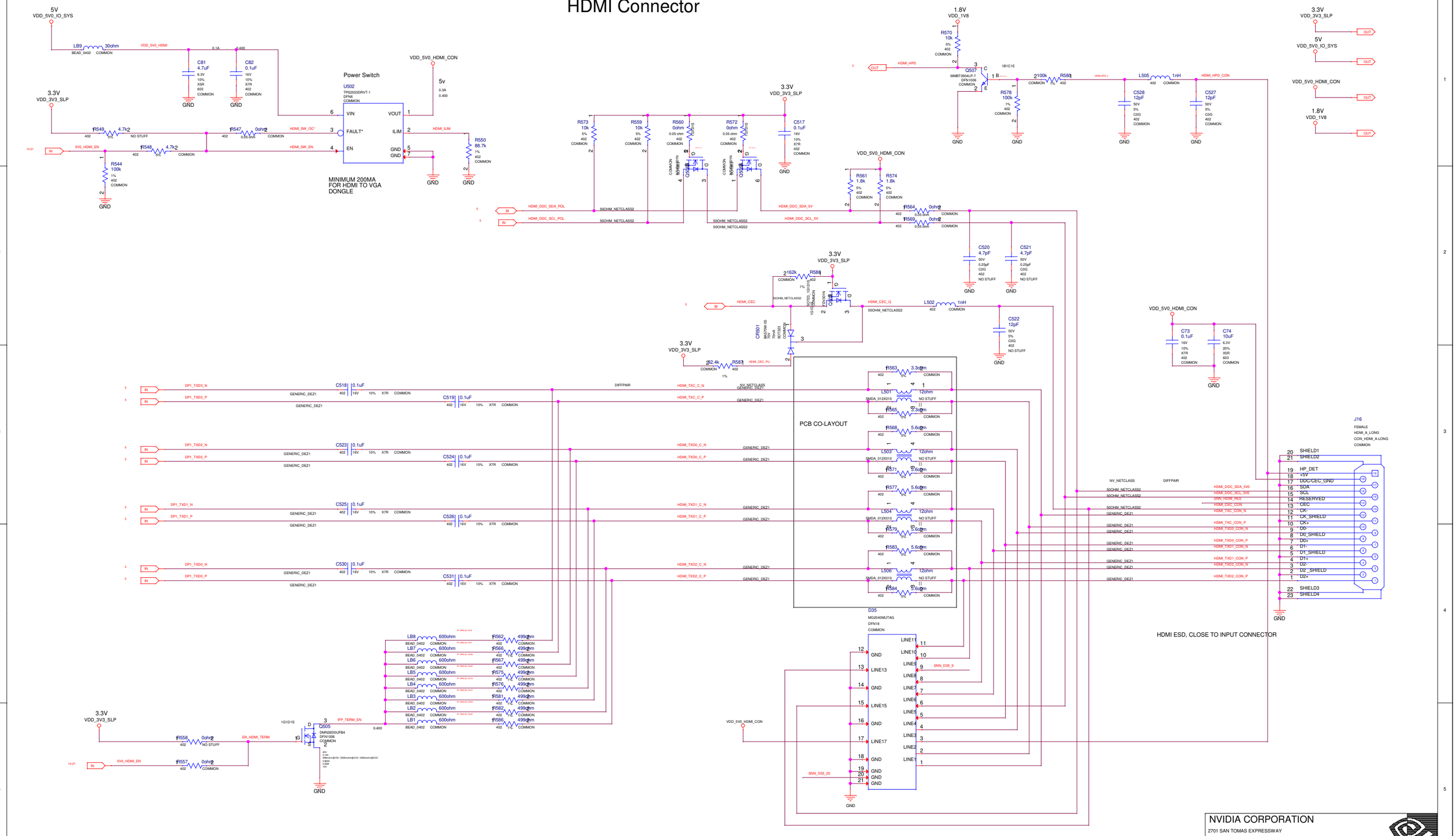

ASSEMBLY	<ASSEMBLY_DESCRIPTION>
PAGE DETAIL	HDMI

ALL NVIDIA DESIGN SPECIFICATIONS, REFERENCE SPECIFICATIONS, REFERENCE BOARDS, FILES, DRAWINGS, DIAGNOSTICS, LISTS AND OTHER DOCUMENTS OR INFORMATION (TOGETHER AND SEPARATELY, 'MATERIALS') ARE BEING PROVIDED 'AS IS'. THE MATERIALS MAY CONTAIN KNOWN AND UNKNOWN VIOLATIONS OR DEVIATIONS OF INDUSTRY STANDARDS AND SPECIFICATIONS. NVIDIA MAKES NO WARRANTIES, EXPRESSED, IMPLIED, STATUTORY OR OTHERWISE WITH RESPECT TO THE MATERIALS OR OTHERWISE, AND EXPRESSLY DISCLAIMS ALL IMPLIED WARRANTIES INCLUDING, WITHOUT LIMITATION, THE WARRANTIES OF DESIGN, OF NONINFRINGEMENT, MERCHANTABILITY OR FITNESS FOR A PARTICULAR PURPOSE, OR ARISING FROM A COURSE OF DEALING, TRADE USAGE, TRADE PRACTICE, OR INDUSTRY STANDARDS.

NVIDIA CORPORATION
2701 SAN TOMAS EXPRESSWAY
SANTA CLARA, CA 95050, USA

NV_PN	600-82597-BASE-900		
PCB REV	P2597-C02	PAGE	14 OF 34
BOM REV	A	DATE	23-OCT-2017

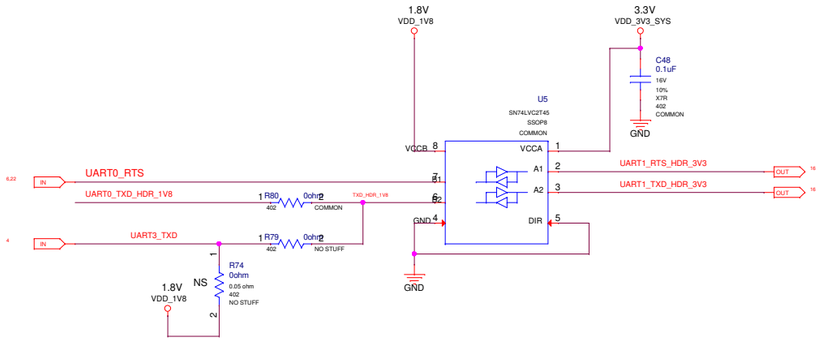

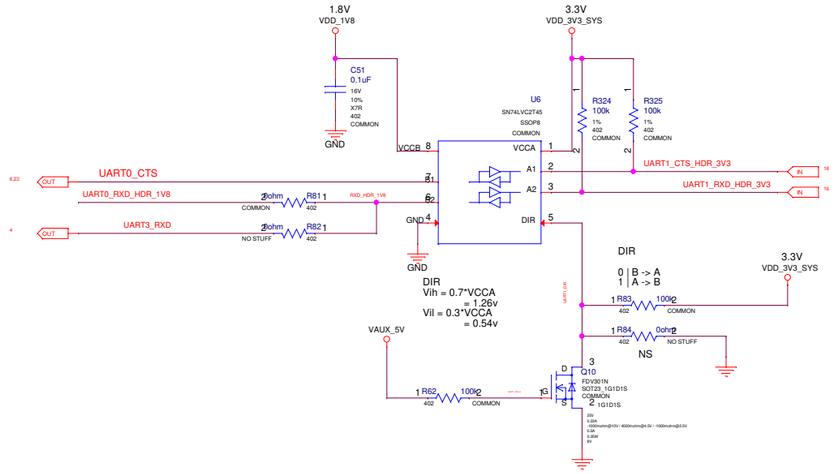

SERIAL PORT

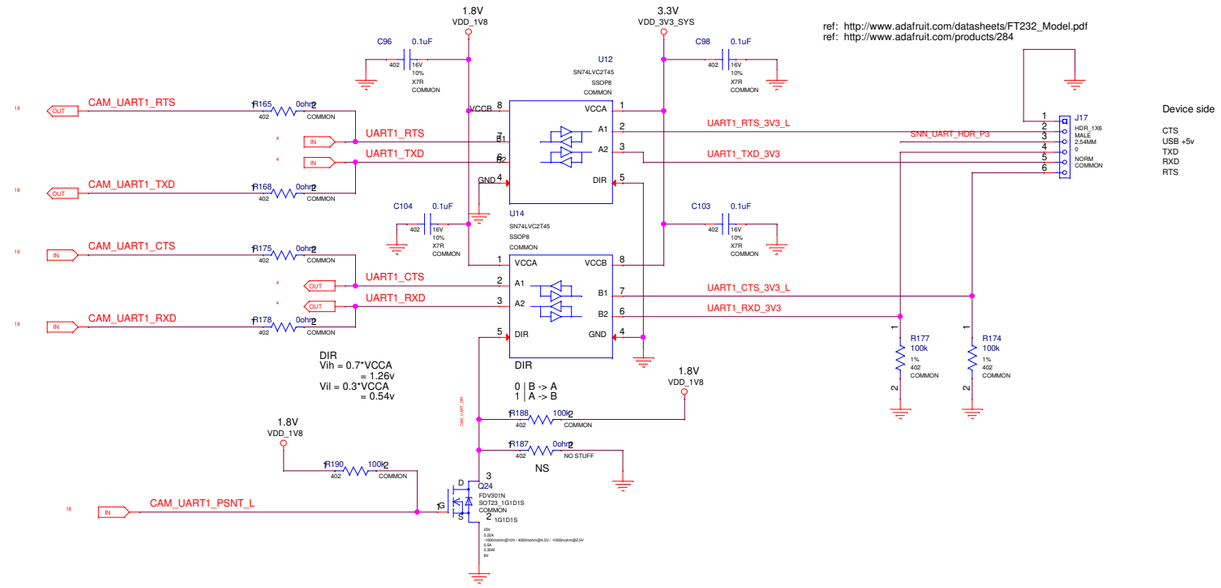

UART MUX

When the 60-pin debug connector is being used

UART is routed to the 60-pin debug connector

When the 60-pin debug connector is NOT being used

UART is routed to the 40pin stake pin header

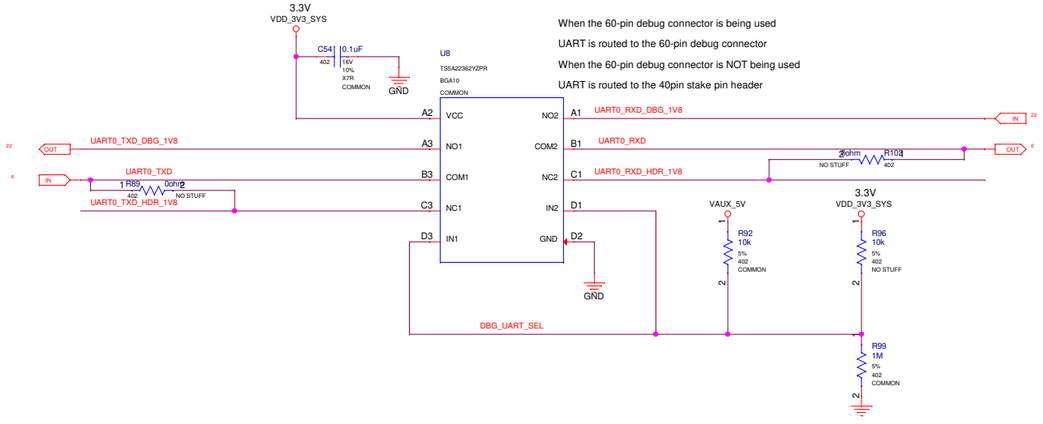

DBG I2C GATE

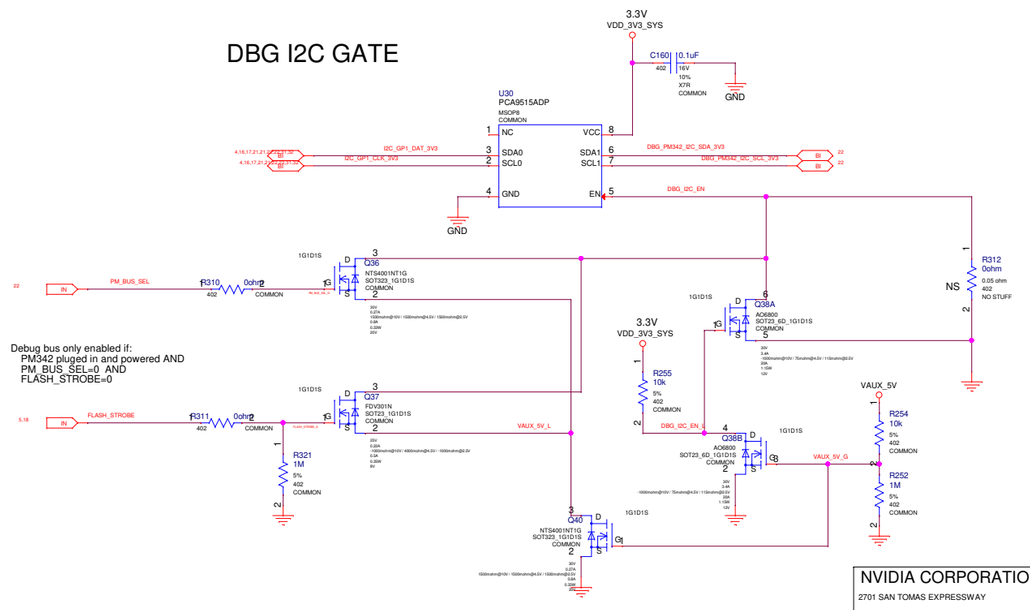

ASSEMBLY	<ASSEMBLY_DESCRIPTION>
PAGE DETAIL	Serial port and JTAG

ALL NVIDIA DESIGN SPECIFICATIONS, REFERENCE SPECIFICATIONS, REFERENCE BOARDS, FILES, DRAWINGS, DIAGNOSTICS, LISTS AND OTHER DOCUMENTS OR INFORMATION (TOGETHER AND SEPARATELY, 'MATERIALS') ARE BEING PROVIDED 'AS IS'. THE MATERIALS MAY CONTAIN KNOWN AND UNKNOWN VIOLATIONS OR DEVIATIONS OF INDUSTRY STANDARDS AND SPECIFICATIONS. NVIDIA MAKES NO WARRANTIES, EXPRESSED, IMPLIED, STATUTORY OR OTHERWISE WITH RESPECT TO THE MATERIALS OR OTHERWISE, AND EXPRESSLY DISCLAIMS ALL IMPLIED WARRANTIES INCLUDING, WITHOUT LIMITATION, THE WARRANTIES OF DESIGN, OF NONINFRINGEMENT, MERCHANTABILITY OR FITNESS FOR A PARTICULAR PURPOSE, OR ARISING FROM A COURSE OF DEALING, TRADE USAGE, TRADE PRACTICE, OR INDUSTRY STANDARDS.

NVIDIA CORPORATION
2701 SAN TOMAS EXPRESSWAY
SANTA CLARA, CA 95050, USA

NV_PN	600-82597-BASE-900		
PCB REV	P2597-C02	PAGE	15 OF 34
BOM REV	A	DATE	23-OCT-2017

GPIO Expansion Headers

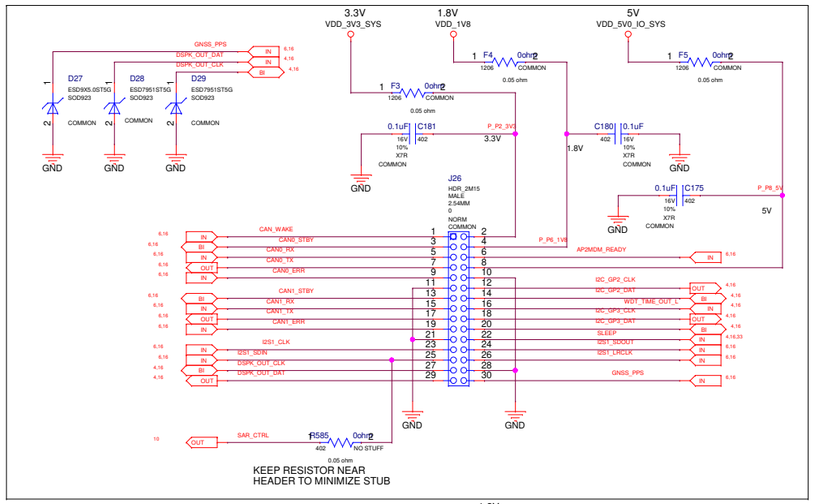

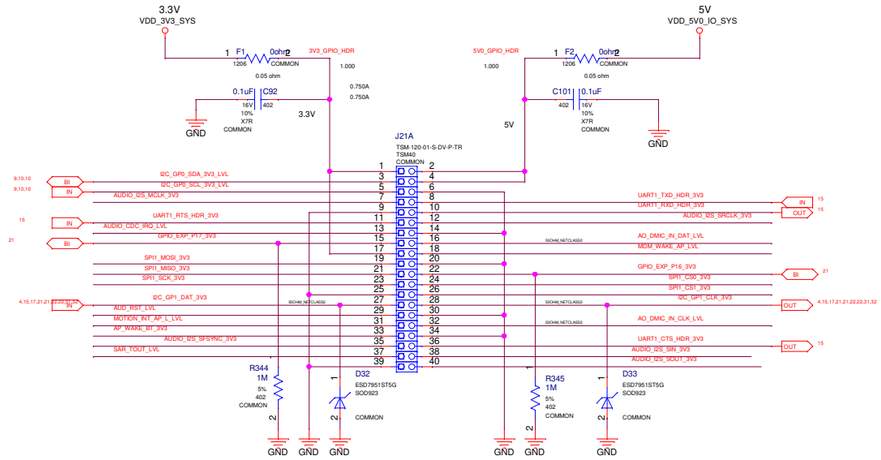

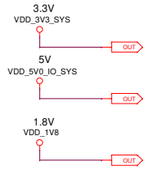

GPIO_PK0 I2S5B_FS
GPIO_PK2 I2S5B_SDOUT
GPIO_PK1 I2S5B_SDIN

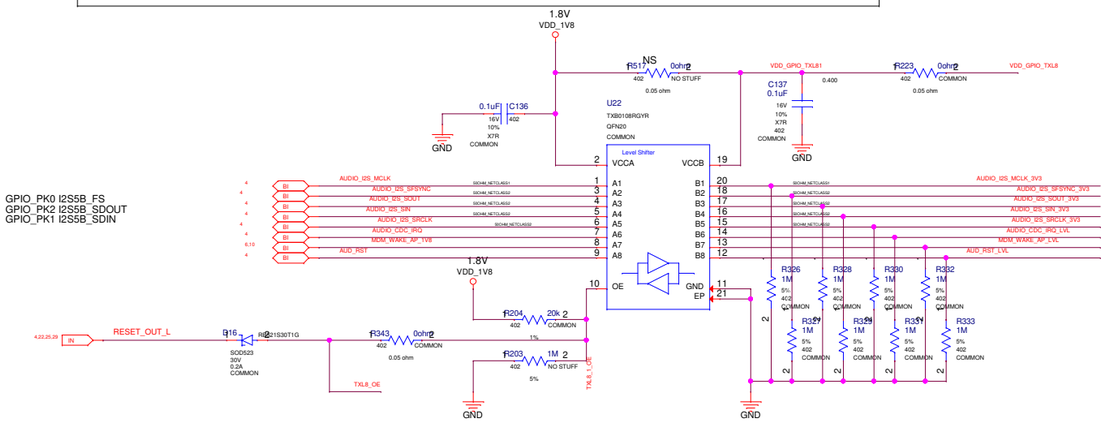

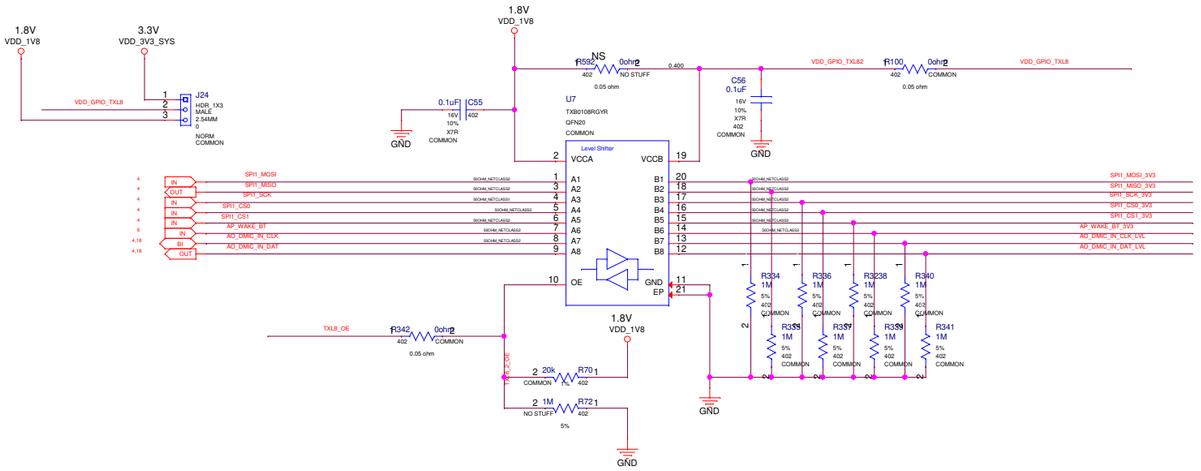

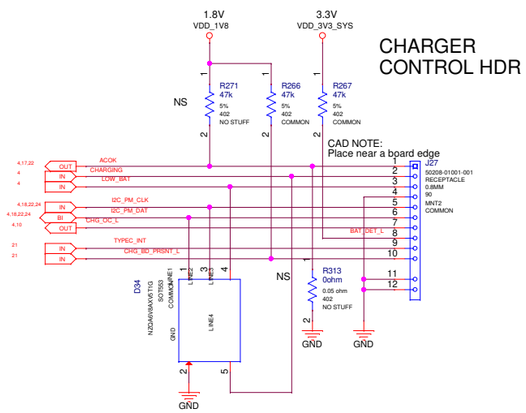

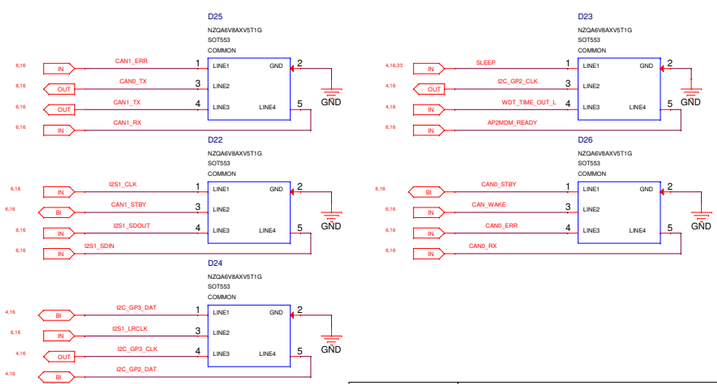

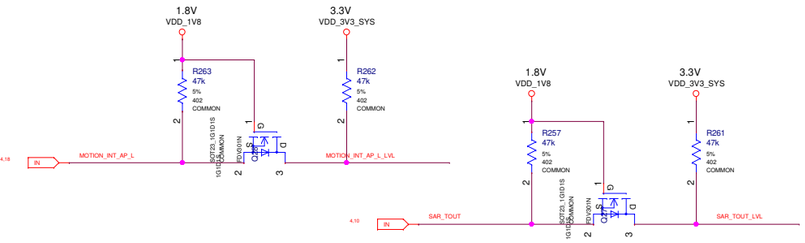

ASSEMBLY	<ASSEMBLY_DESCRIPTION>
PAGE DETAIL	IO Expansion Connector

ALL NVIDIA DESIGN SPECIFICATIONS, REFERENCE SPECIFICATIONS, REFERENCE BOARDS, FILES, DRAWINGS, DIAGNOSTICS, LISTS AND OTHER DOCUMENTS OR INFORMATION (TOGETHER AND SEPARATELY, 'MATERIALS') ARE BEING PROVIDED 'AS IS'. THE MATERIALS MAY CONTAIN KNOWN AND UNKNOWN VIOLATIONS OR DEVIATIONS OF INDUSTRY STANDARDS AND SPECIFICATIONS. NVIDIA MAKES NO WARRANTIES, EXPRESSED, IMPLIED, STATUTORY OR OTHERWISE WITH RESPECT TO THE MATERIALS OR OTHERWISE, AND EXPRESSLY DISCLAIMS ALL IMPLIED WARRANTIES INCLUDING, WITHOUT LIMITATION, THE WARRANTIES OF DESIGN, OF NONINFRINGEMENT, MERCHANTABILITY OR FITNESS FOR A PARTICULAR PURPOSE, OR ARISING FROM A COURSE OF DEALING, TRADE USAGE, TRADE PRACTICE, OR INDUSTRY STANDARDS.

NVIDIA CORPORATION
2701 SAN TOMAS EXPRESSWAY
SANTA CLARA, CA 95050, USA

NV_PN	600-82597-BASE-900		
PCB REV	P2597-C02	PAGE	16 OF 34
BOM REV	A	DATE	23-OCT-2017

DISPLAY CONNECTOR

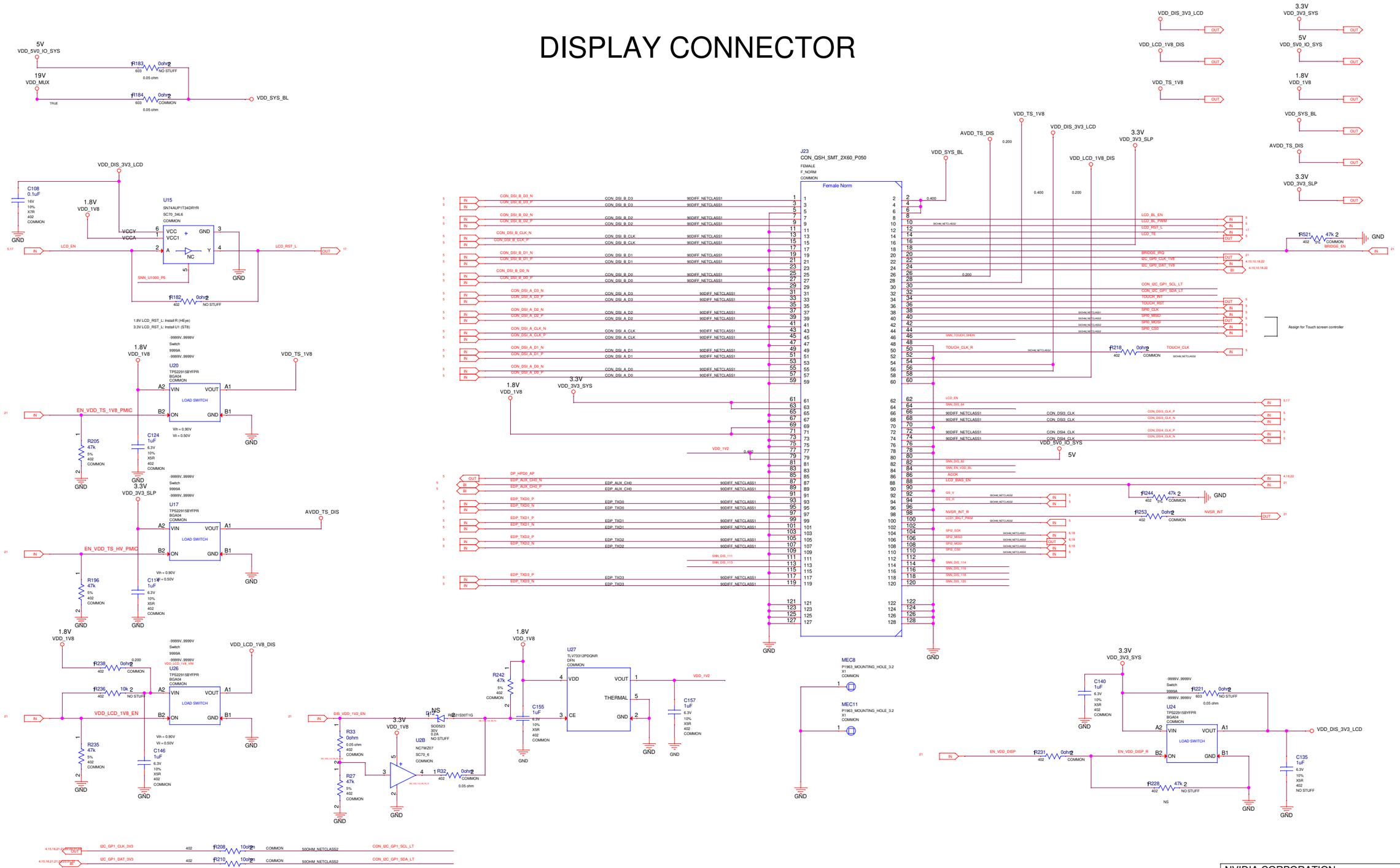

ASSEMBLY	<ASSEMBLY_DESCRIPTION>
PAGE DETAIL	DSI Connector

ALL NVIDIA DESIGN SPECIFICATIONS, REFERENCE SPECIFICATIONS, REFERENCE BOARDS, FILES, DRAWINGS, DIAGNOSTICS, LISTS AND OTHER DOCUMENTS OR INFORMATION (TOGETHER AND SEPARATELY, 'MATERIALS') ARE BEING PROVIDED 'AS IS'. THE MATERIALS MAY CONTAIN KNOWN AND UNKNOWN VIOLATIONS OR DEVIATIONS OF INDUSTRY STANDARDS AND SPECIFICATIONS. NVIDIA MAKES NO WARRANTIES, EXPRESSED, IMPLIED, STATUTORY OR OTHERWISE WITH RESPECT TO THE MATERIALS OR OTHERWISE, AND EXPRESSLY DISCLAIMS ALL IMPLIED WARRANTIES INCLUDING, WITHOUT LIMITATION, THE WARRANTIES OF DESIGN, OF NONINFRINGEMENT, MERCHANTABILITY OR FITNESS FOR A PARTICULAR PURPOSE, OR ARISING FROM A COURSE OF DEALING, TRADE USAGE, TRADE PRACTICE, OR INDUSTRY STANDARDS.

NVIDIA CORPORATION
2701 SAN TOMAS EXPRESSWAY
SANTA CLARA, CA 95050, USA

NV_PN	600-82597-BASE-900		
PCB REV	P2597-C02	PAGE	17 OF 34
BOM REV	A	DATE	23-OCT-2017

Camera Expansion

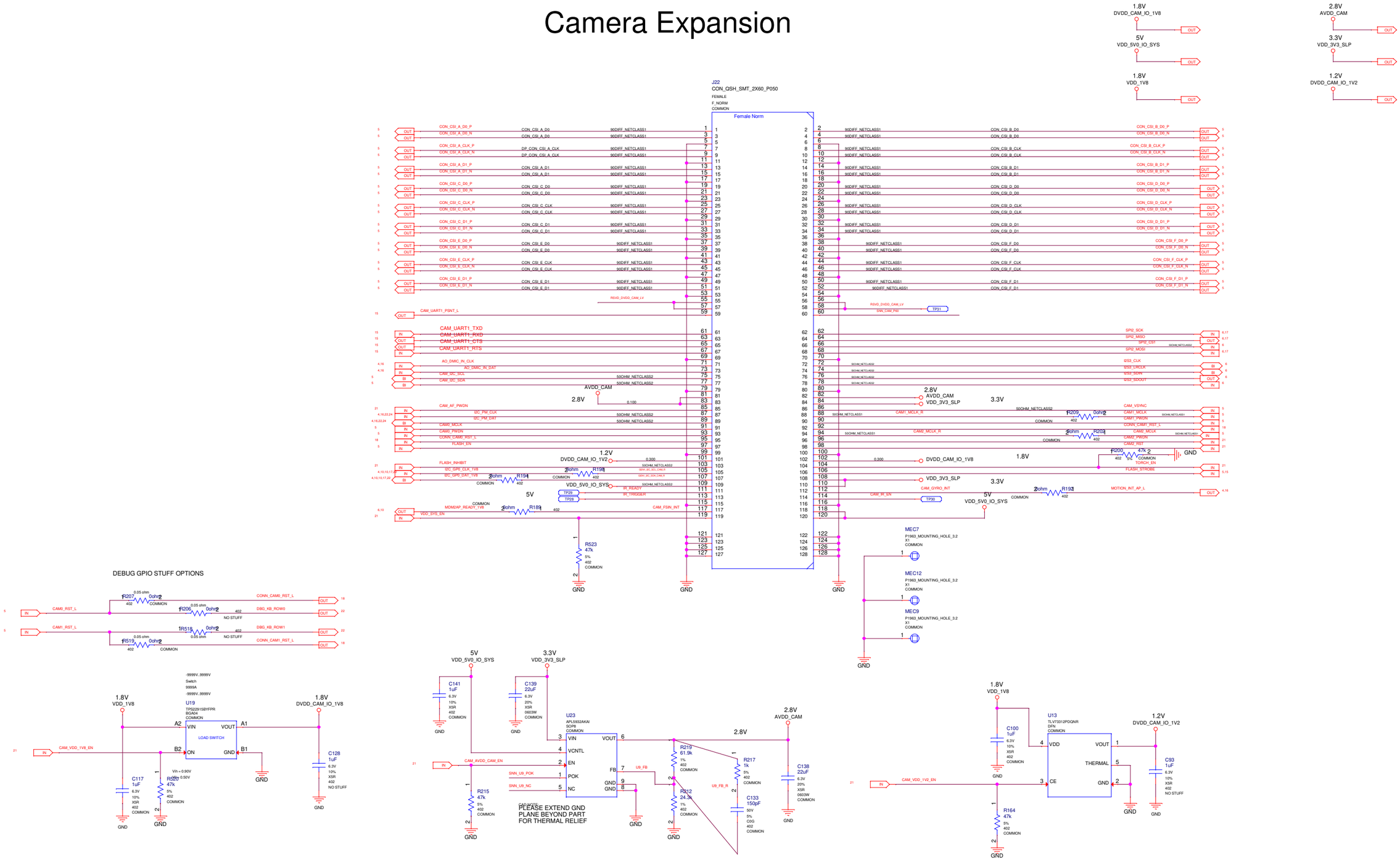

ASSEMBLY	<ASSEMBLY_DESCRIPTION>
PAGE DETAIL	CSI Connector

ALL NVIDIA DESIGN SPECIFICATIONS, REFERENCE SPECIFICATIONS, REFERENCE BOARDS, FILES, DRAWINGS, DIAGNOSTICS, LISTS AND OTHER DOCUMENTS OR INFORMATION (TOGETHER AND SEPARATELY, 'MATERIALS') ARE BEING PROVIDED 'AS IS'. THE MATERIALS MAY CONTAIN KNOWN AND UNKNOWN VIOLATIONS OR DEVIATIONS OF INDUSTRY STANDARDS AND SPECIFICATIONS. NVIDIA MAKES NO WARRANTIES, EXPRESSED, IMPLIED, STATUTORY OR OTHERWISE WITH RESPECT TO THE MATERIALS OR OTHERWISE, AND EXPRESSLY DISCLAIMS ALL IMPLIED WARRANTIES INCLUDING, WITHOUT LIMITATION, THE WARRANTIES OF DESIGN, OF NONINFRINGEMENT, MERCHANTABILITY OR FITNESS FOR A PARTICULAR PURPOSE, OR ARISING FROM A COURSE OF DEALING, TRADE USAGE, TRADE PRACTICE, OR INDUSTRY STANDARDS.

NVIDIA CORPORATION
2701 SAN TOMAS EXPRESSWAY
SANTA CLARA, CA 95050, USA

NV_PN	600-82597-BASE-900		
PCB REV	P2597-C02	PAGE	18 OF 34
BOM REV	A	DATE	23-OCT-2017

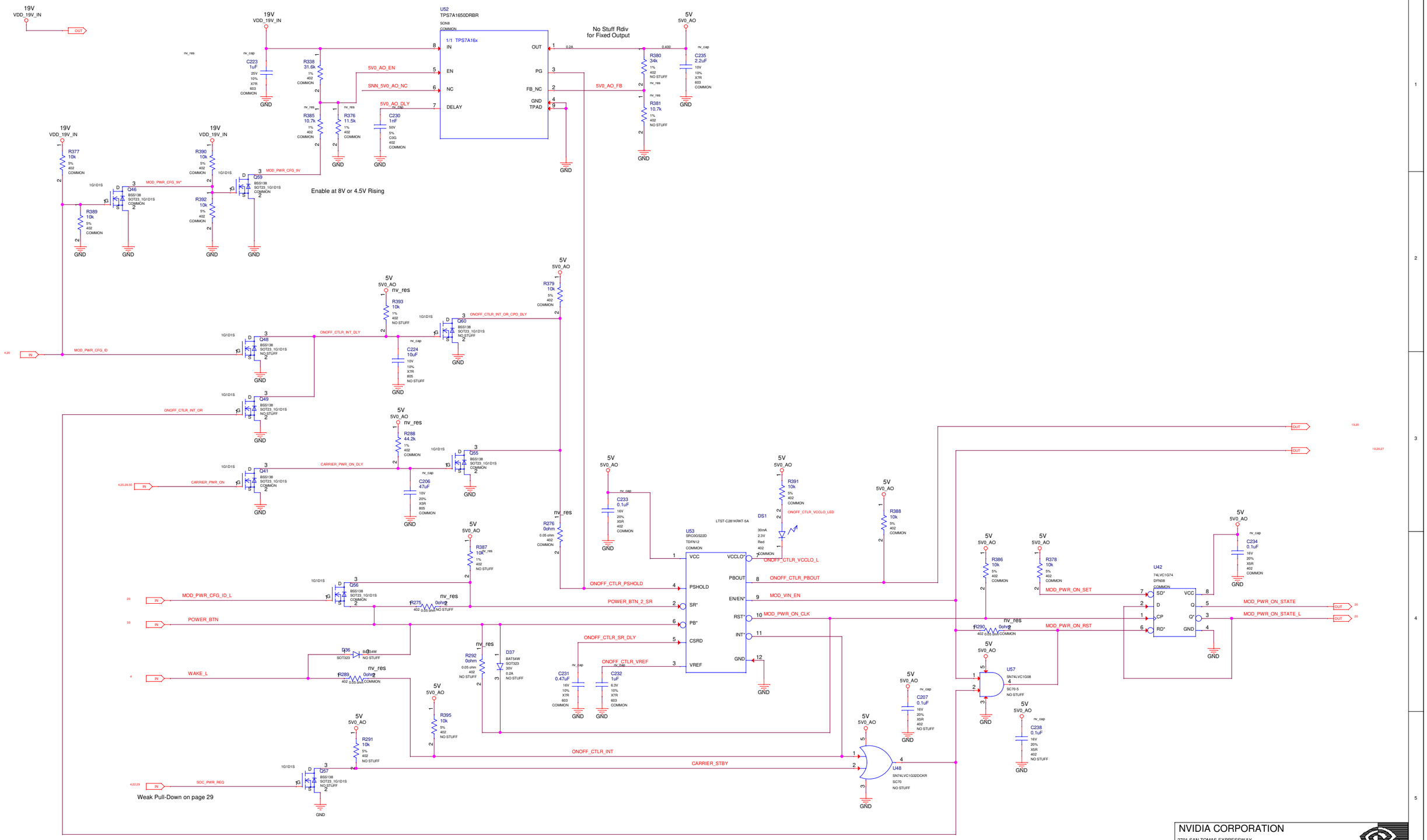

ASSEMBLY	<ASSEMBLY_DESCRIPTION>
PAGE DETAIL	ON OFF CONTROLLER

ALL NVIDIA DESIGN SPECIFICATIONS, REFERENCE SPECIFICATIONS, REFERENCE BOARDS, FILES, DRAWINGS, DIAGNOSTICS, LISTS AND OTHER DOCUMENTS OR INFORMATION (TOGETHER AND SEPARATELY, 'MATERIALS') ARE BEING PROVIDED 'AS IS'. THE MATERIALS MAY CONTAIN KNOWN AND UNKNOWN VIOLATIONS OR DEVIATIONS OF INDUSTRY STANDARDS AND SPECIFICATIONS. NVIDIA MAKES NO WARRANTIES, EXPRESSED, IMPLIED, STATUTORY OR OTHERWISE WITH RESPECT TO THE MATERIALS OR OTHERWISE, AND EXPRESSLY DISCLAIMS ALL IMPLIED WARRANTIES INCLUDING, WITHOUT LIMITATION, THE WARRANTIES OF DESIGN, OF NONINFRINGEMENT, MERCHANTABILITY OR FITNESS FOR A PARTICULAR PURPOSE, OR ARISING FROM A COURSE OF DEALING, TRADE USAGE, TRADE PRACTICE, OR INDUSTRY STANDARDS.

NVIDIA CORPORATION
2701 SAN TOMAS EXPRESSWAY
SANTA CLARA, CA 95050, USA

NV_PN	600-82597-BASE-900		
PCB REV	P2597-C02	PAGE	19 OF 34
BOM REV	A	DATE	23-OCT-2017

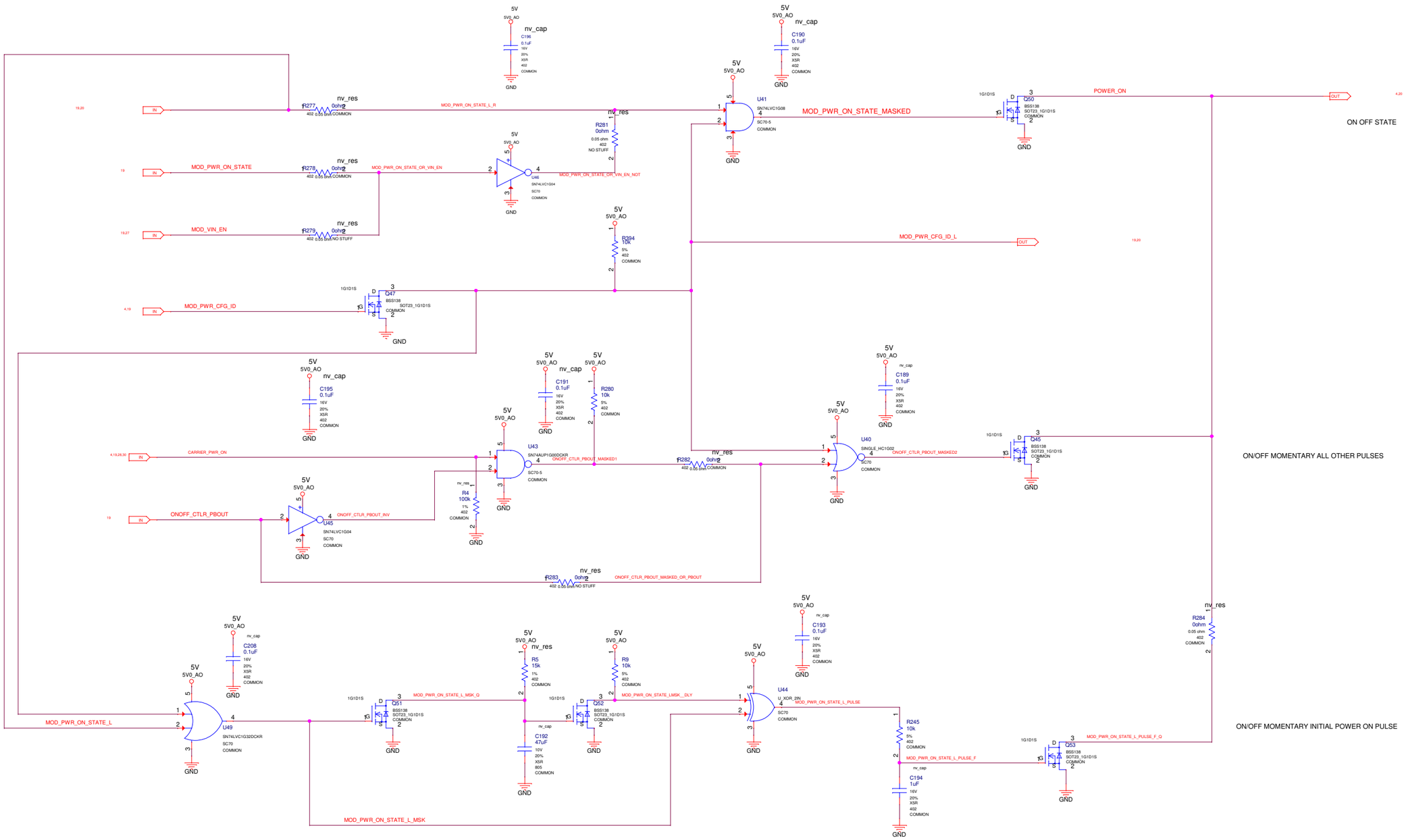

ASSEMBLY	<ASSEMBLY_DESCRIPTION>
PAGE DETAIL	ON OFF CONTROL OUTPUT LOGIC

ALL NVIDIA DESIGN SPECIFICATIONS, REFERENCE SPECIFICATIONS, REFERENCE BOARDS, FILES, DRAWINGS, DIAGNOSTICS, LISTS AND OTHER DOCUMENTS OR INFORMATION (TOGETHER AND SEPARATELY, 'MATERIALS') ARE BEING PROVIDED 'AS IS'. THE MATERIALS MAY CONTAIN KNOWN AND UNKNOWN VIOLATIONS OR DEVIATIONS OF INDUSTRY STANDARDS AND SPECIFICATIONS. NVIDIA MAKES NO WARRANTIES, EXPRESSED, IMPLIED, STATUTORY OR OTHERWISE WITH RESPECT TO THE MATERIALS OR OTHERWISE, AND EXPRESSLY DISCLAIMS ALL IMPLIED WARRANTIES INCLUDING, WITHOUT LIMITATION, THE WARRANTIES OF DESIGN, OF NONINFRINGEMENT, MERCHANTABILITY OR FITNESS FOR A PARTICULAR PURPOSE, OR ARISING FROM A COURSE OF DEALING, TRADE USAGE, TRADE PRACTICE, OR INDUSTRY STANDARDS.

NVIDIA CORPORATION
2701 SAN TOMAS EXPRESSWAY
SANTA CLARA, CA 95050, USA

NV_PN	600-82597-BASE-900		
PCB REV	P2597-C02	PAGE	20 OF 34
BOM REV	A	DATE	23-OCT-2017

GPIO EXPANDERS

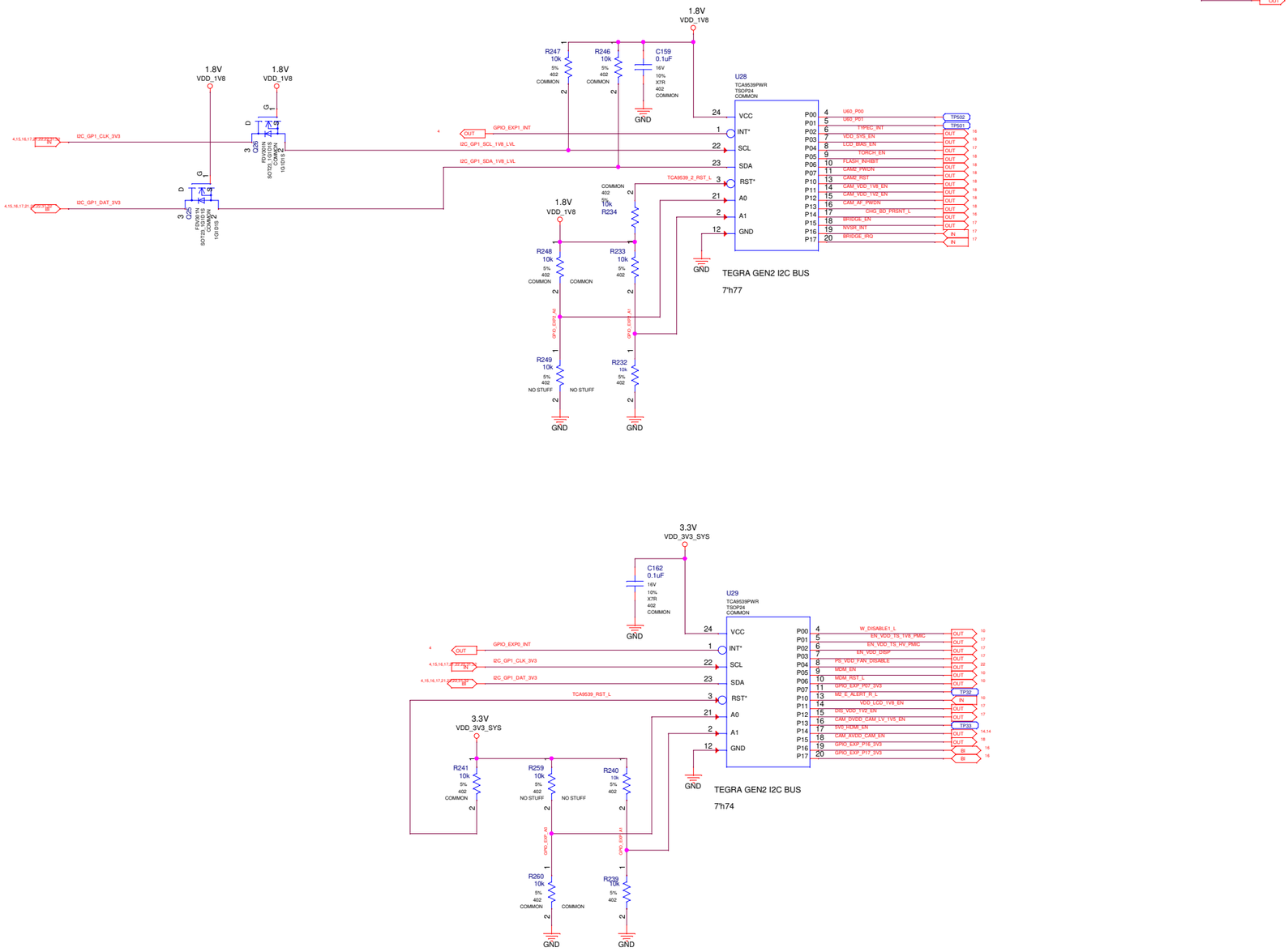

ASSEMBLY	<ASSEMBLY_DESCRIPTION>
PAGE DETAIL	GPIO Expanders

ALL NVIDIA DESIGN SPECIFICATIONS, REFERENCE SPECIFICATIONS, REFERENCE BOARDS, FILES, DRAWINGS, DIAGNOSTICS, LISTS AND OTHER DOCUMENTS OR INFORMATION (TOGETHER AND SEPARATELY, 'MATERIALS') ARE BEING PROVIDED 'AS IS'. THE MATERIALS MAY CONTAIN KNOWN AND UNKNOWN VIOLATIONS OR DEVIATIONS OF INDUSTRY STANDARDS AND SPECIFICATIONS. NVIDIA MAKES NO WARRANTIES, EXPRESSED, IMPLIED, STATUTORY OR OTHERWISE WITH RESPECT TO THE MATERIALS OR OTHERWISE, AND EXPRESSLY DISCLAIMS ALL IMPLIED WARRANTIES INCLUDING, WITHOUT LIMITATION, THE WARRANTIES OF DESIGN, OF NONINFRINGEMENT, MERCHANTABILITY OR FITNESS FOR A PARTICULAR PURPOSE, OR ARISING FROM A COURSE OF DEALING, TRADE USAGE, TRADE PRACTICE, OR INDUSTRY STANDARDS.

NVIDIA CORPORATION
2701 SAN TOMAS EXPRESSWAY
SANTA CLARA, CA 95050, USA

NV_PN	600-82597-BASE-900		
PCB REV	P2597-C02	PAGE	21 OF 34
BOM REV	A	DATE	23-OCT-2017

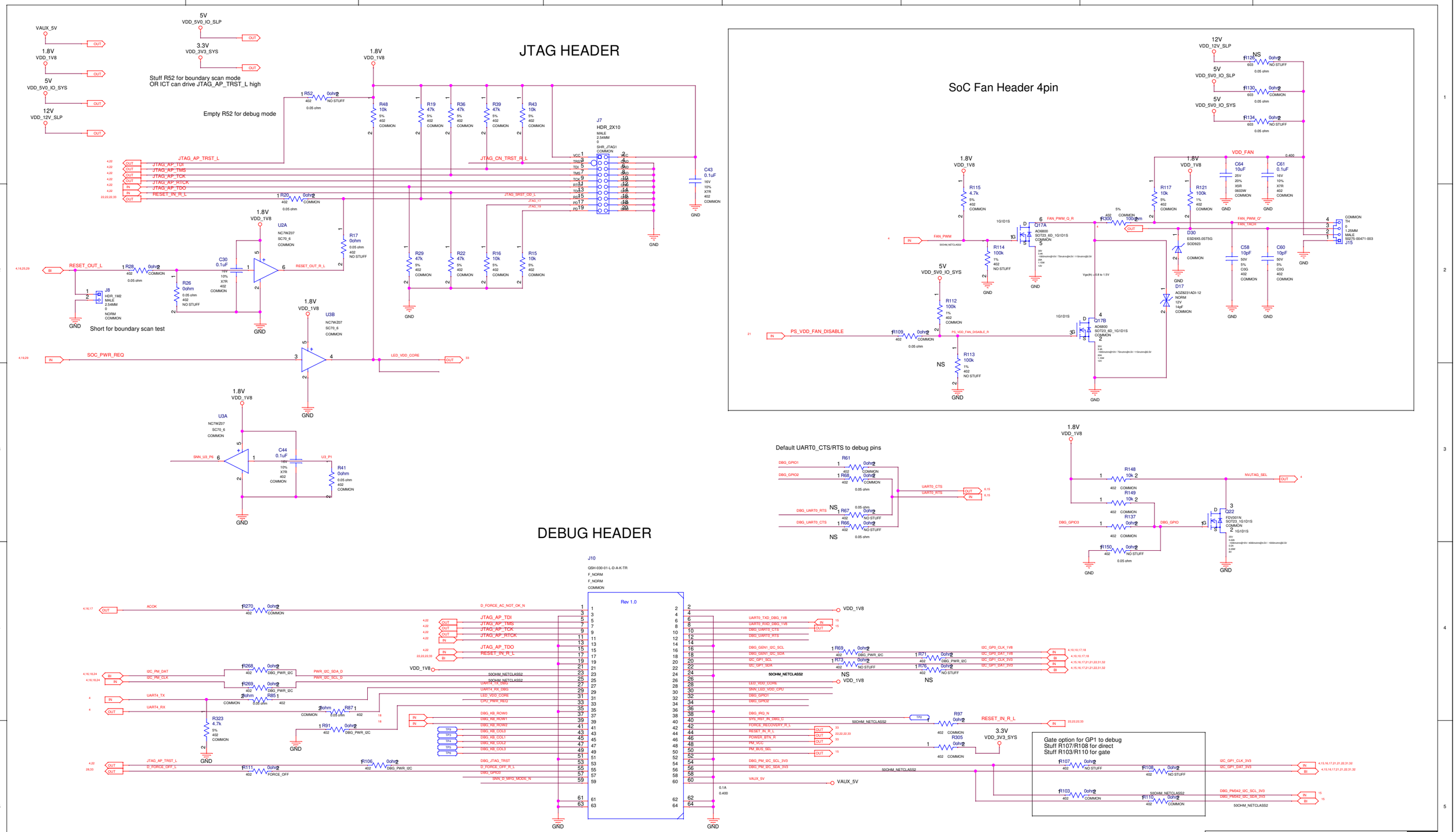

ASSEMBLY	<ASSEMBLY_DESCRIPTION>
PAGE DETAIL	FAN AND DEBUG

ALL NVIDIA DESIGN SPECIFICATIONS, REFERENCE SPECIFICATIONS, REFERENCE BOARDS, FILES, DRAWINGS, DIAGNOSTICS, LISTS AND OTHER DOCUMENTS OR INFORMATION (TOGETHER AND SEPARATELY, 'MATERIALS') ARE BEING PROVIDED 'AS IS'. THE MATERIALS MAY CONTAIN KNOWN AND UNKNOWN VIOLATIONS OR DEVIATIONS OF INDUSTRY STANDARDS AND SPECIFICATIONS. NVIDIA MAKES NO WARRANTIES, EXPRESSED, IMPLIED, STATUTORY OR OTHERWISE WITH RESPECT TO THE MATERIALS OR OTHERWISE, AND EXPRESSLY DISCLAIMS ALL IMPLIED WARRANTIES INCLUDING, WITHOUT LIMITATION, THE WARRANTIES OF DESIGN, OF NONINFRINGEMENT, MERCHANTABILITY OR FITNESS FOR A PARTICULAR PURPOSE, OR ARISING FROM A COURSE OF DEALING, TRADE USAGE, TRADE PRACTICE, OR INDUSTRY STANDARDS.

NVIDIA CORPORATION
2701 SAN TOMAS EXPRESSWAY
SANTA CLARA, CA 95050, USA

NV_PN	600-82597-BASE-900		
PCB REV	P2597-C02	PAGE	22 OF 34
BOM REV	A	DATE	23-OCT-2017

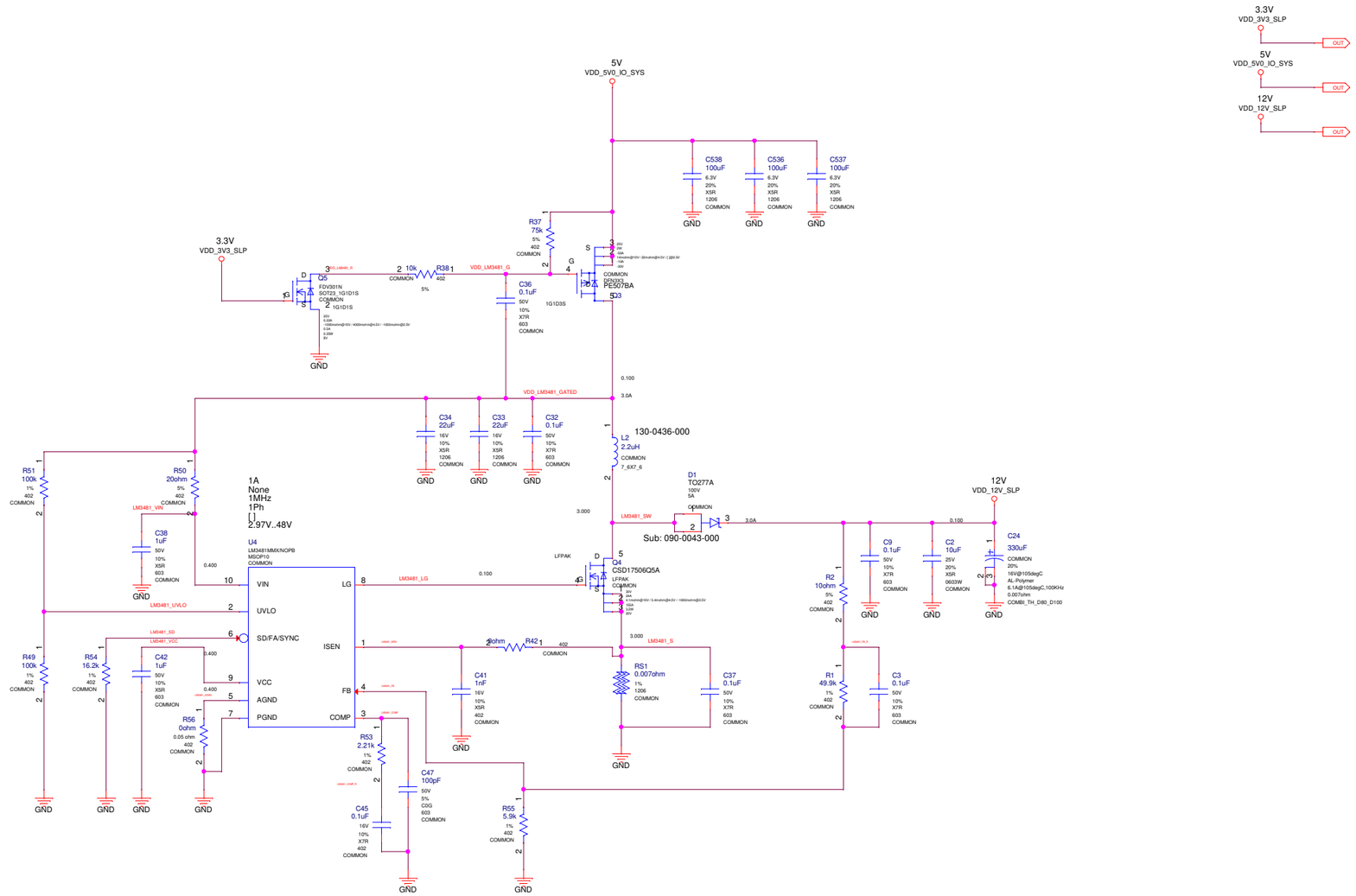

ASSEMBLY	<ASSEMBLY_DESCRIPTION>
PAGE DETAIL	12V BOOST

ALL NVIDIA DESIGN SPECIFICATIONS, REFERENCE SPECIFICATIONS, REFERENCE BOARDS, FILES, DRAWINGS, DIAGNOSTICS, LISTS AND OTHER DOCUMENTS OR INFORMATION (TOGETHER AND SEPARATELY, 'MATERIALS') ARE BEING PROVIDED 'AS IS'. THE MATERIALS MAY CONTAIN KNOWN AND UNKNOWN VIOLATIONS OR DEVIATIONS OF INDUSTRY STANDARDS AND SPECIFICATIONS. NVIDIA MAKES NO WARRANTIES, EXPRESSED, IMPLIED, STATUTORY OR OTHERWISE WITH RESPECT TO THE MATERIALS OR OTHERWISE, AND EXPRESSLY DISCLAIMS ALL IMPLIED WARRANTIES INCLUDING, WITHOUT LIMITATION, THE WARRANTIES OF DESIGN, OF NONINFRINGEMENT, MERCHANTABILITY OR FITNESS FOR A PARTICULAR PURPOSE, OR ARISING FROM A COURSE OF DEALING, TRADE USAGE, TRADE PRACTICE, OR INDUSTRY STANDARDS.

NVIDIA CORPORATION
2701 SAN TOMAS EXPRESSWAY
SANTA CLARA, CA 95050, USA

NV_PN	600-82597-BASE-900		
PCB REV	P2597-C02	PAGE	23 OF 34
BOM REV	A	DATE	23-OCT-2017

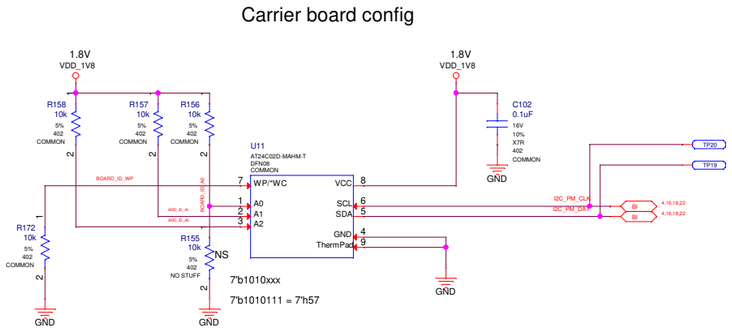

ALL NVIDIA DESIGN SPECIFICATIONS, REFERENCE SPECIFICATIONS, REFERENCE BOARDS, FILES, DRAWINGS, DIAGNOSTICS, LISTS AND OTHER DOCUMENTS OR INFORMATION (TOGETHER AND SEPARATELY, "MATERIALS") ARE BEING PROVIDED "AS IS". THE MATERIALS MAY CONTAIN KNOWN AND UNKNOWN VIOLATIONS OR DEVIATIONS OF INDUSTRY STANDARDS AND SPECIFICATIONS. NVIDIA MAKES NO WARRANTIES, EXPRESSED, IMPLIED, STATUTORY OR OTHERWISE WITH RESPECT TO THE MATERIALS OR OTHERWISE, AND EXPRESSLY DISCLAIMS ALL IMPLIED WARRANTIES INCLUDING, WITHOUT LIMITATION, THE WARRANTIES OF DESIGN, OF NONINFRINGEMENT, MERCHANTABILITY OR FITNESS FOR A PARTICULAR PURPOSE, OR ARISING FROM A COURSE OF DEALING, TRADE USAGE, TRADE PRACTICE, OR INDUSTRY STANDARDS.

ASSEMBLY	<ASSEMBLY_DESCRIPTION>
PAGE DETAIL	EEPROM

NVIDIA CORPORATION
2701 SAN TOMAS EXPRESSWAY
SANTA CLARA, CA 95050, USA

NV_PN	600-82597-BASE-900		
PCB REV	P2597-C02	PAGE	24 OF 34
BOM REV	A	DATE	23-OCT-2017

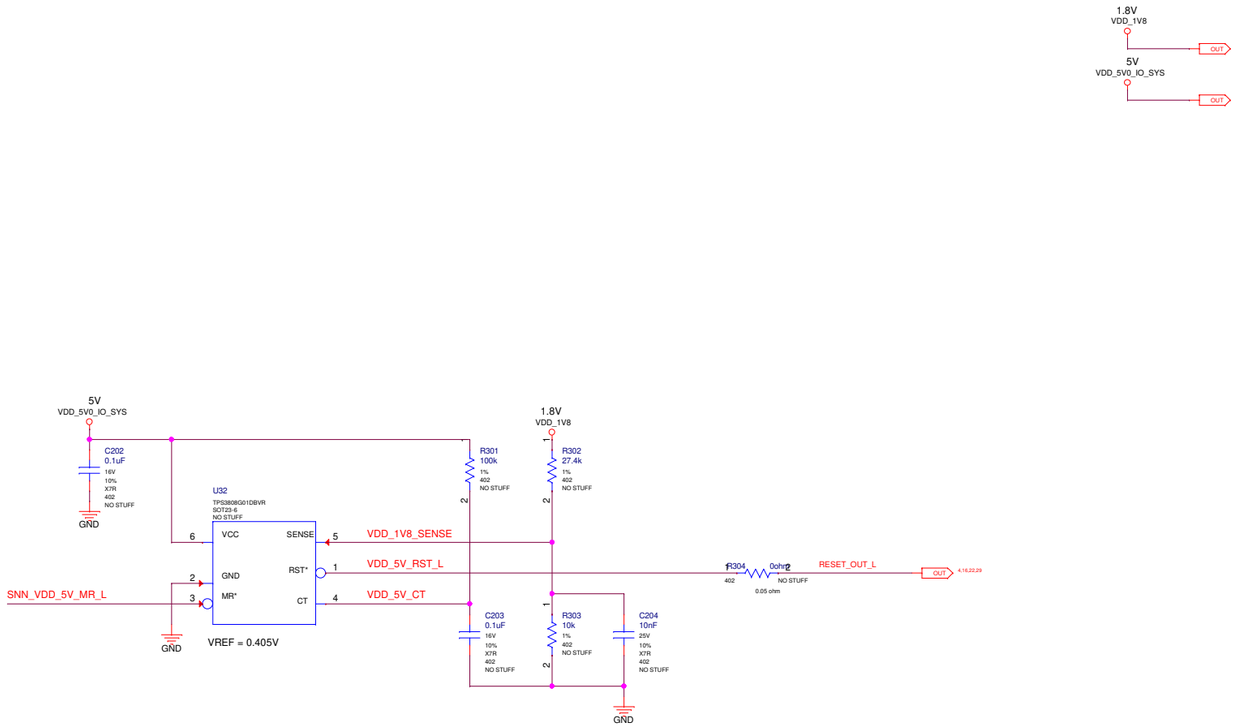

ASSEMBLY	<ASSEMBLY_DESCRIPTION>
PAGE DETAIL	Supervisor

ALL NVIDIA DESIGN SPECIFICATIONS, REFERENCE SPECIFICATIONS, REFERENCE BOARDS, FILES, DRAWINGS, DIAGNOSTICS, LISTS AND OTHER DOCUMENTS OR INFORMATION (TOGETHER AND SEPARATELY, "MATERIALS") ARE BEING PROVIDED "AS IS". THE MATERIALS MAY CONTAIN KNOWN AND UNKNOWN VIOLATIONS OR DEVIATIONS OF INDUSTRY STANDARDS AND SPECIFICATIONS. NVIDIA MAKES NO WARRANTIES, EXPRESSED, IMPLIED, STATUTORY OR OTHERWISE WITH RESPECT TO THE MATERIALS OR OTHERWISE, AND EXPRESSLY DISCLAIMS ALL IMPLIED WARRANTIES INCLUDING, WITHOUT LIMITATION, THE WARRANTIES OF DESIGN, OF NONINFRINGEMENT, MERCHANTABILITY OR FITNESS FOR A PARTICULAR PURPOSE, OR ARISING FROM A COURSE OF DEALING, TRADE USAGE, TRADE PRACTICE, OR INDUSTRY STANDARDS.

NVIDIA CORPORATION
2701 SAN TOMAS EXPRESSWAY
SANTA CLARA, CA 95050, USA

NV_PN	600-82597-BASE-900		
PCB REV	P2597-C02	PAGE	25 OF 34
BOM REV	A	DATE	23-OCT-2017

BLANK

ASSEMBLY	<ASSEMBLY_DESCRIPTION>
PAGE DETAIL	BLANK

ALL NVIDIA DESIGN SPECIFICATIONS, REFERENCE SPECIFICATIONS, REFERENCE BOARDS, FILES, DRAWINGS, DIAGNOSTICS, LISTS AND OTHER DOCUMENTS OR INFORMATION (TOGETHER AND SEPARATELY, 'MATERIALS') ARE BEING PROVIDED 'AS IS'. THE MATERIALS MAY CONTAIN KNOWN AND UNKNOWN VIOLATIONS OR DEVIATIONS OF INDUSTRY STANDARDS AND SPECIFICATIONS. NVIDIA MAKES NO WARRANTIES, EXPRESSED, IMPLIED, STATUTORY OR OTHERWISE WITH RESPECT TO THE MATERIALS OR OTHERWISE, AND EXPRESSLY DISCLAIMS ALL IMPLIED WARRANTIES INCLUDING, WITHOUT LIMITATION, THE WARRANTIES OF DESIGN, OF NONINFRINGEMENT, MERCHANTABILITY OR FITNESS FOR A PARTICULAR PURPOSE, OR ARISING FROM A COURSE OF DEALING, TRADE USAGE, TRADE PRACTICE, OR INDUSTRY STANDARDS.

NVIDIA CORPORATION
2701 SAN TOMAS EXPRESSWAY
SANTA CLARA, CA 95050, USA

NV_PN	600-82597-BASE-900		
PCB REV	P2597-C02	PAGE	26 OF 34
BOM REV	A	DATE	23-OCT-2017

19V Jack

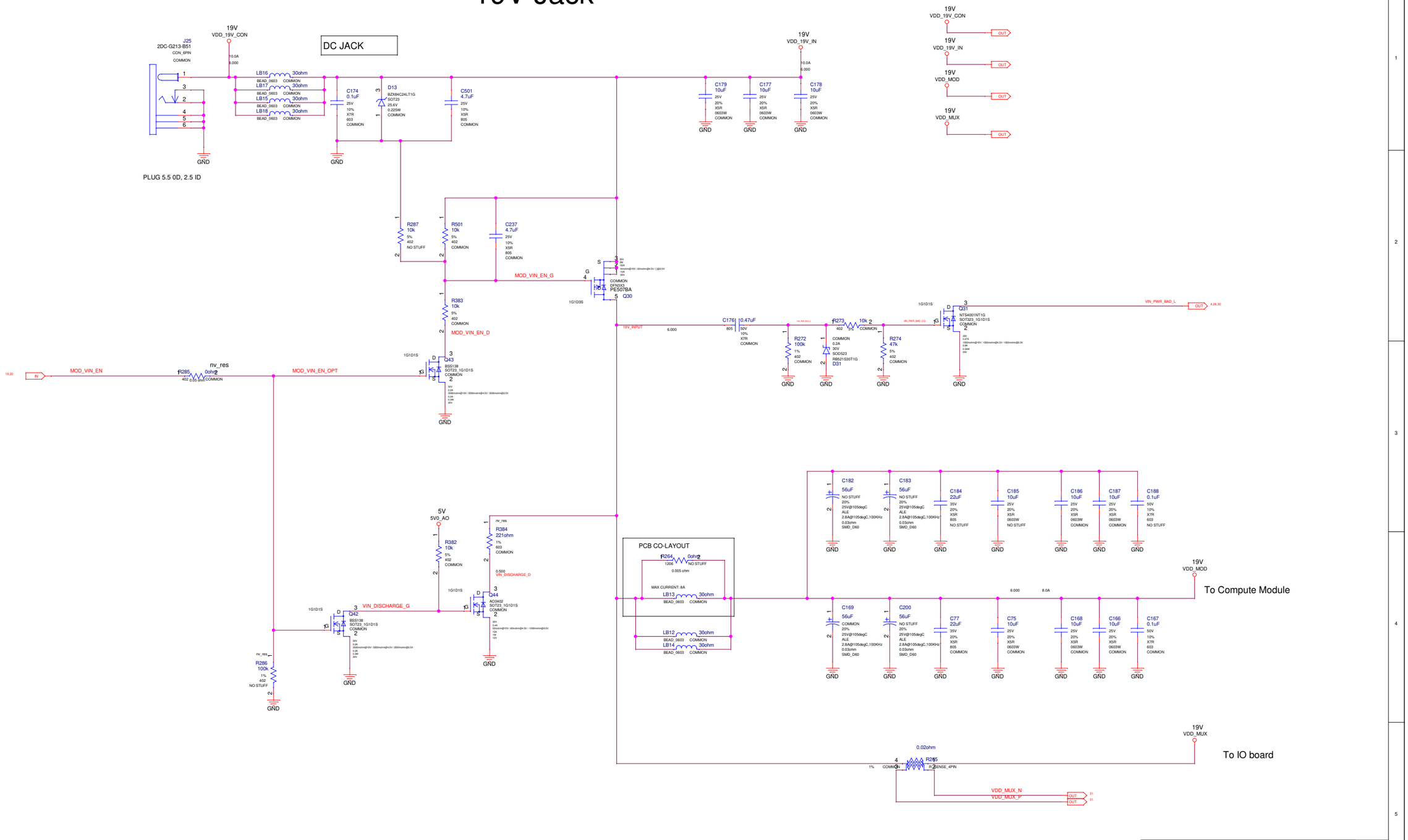

ASSEMBLY	<ASSEMBLY_DESCRIPTION>
PAGE DETAIL	DC Jack

ALL NVIDIA DESIGN SPECIFICATIONS, REFERENCE SPECIFICATIONS, REFERENCE BOARDS, FILES, DRAWINGS, DIAGNOSTICS, LISTS AND OTHER DOCUMENTS OR INFORMATION (TOGETHER AND SEPARATELY, 'MATERIALS') ARE BEING PROVIDED 'AS IS'. THE MATERIALS MAY CONTAIN KNOWN AND UNKNOWN VIOLATIONS OR DEVIATIONS OF INDUSTRY STANDARDS AND SPECIFICATIONS. NVIDIA MAKES NO WARRANTIES, EXPRESSED, IMPLIED, STATUTORY OR OTHERWISE WITH RESPECT TO THE MATERIALS OR OTHERWISE, AND EXPRESSLY DISCLAIMS ALL IMPLIED WARRANTIES INCLUDING, WITHOUT LIMITATION, THE WARRANTIES OF DESIGN, OF NONINFRINGEMENT, MERCHANTABILITY OR FITNESS FOR A PARTICULAR PURPOSE, OR ARISING FROM A COURSE OF DEALING, TRADE USAGE, TRADE PRACTICE, OR INDUSTRY STANDARDS.

NVIDIA CORPORATION
2701 SAN TOMAS EXPRESSWAY
SANTA CLARA, CA 95050, USA

NV_PN	600-82597-BASE-900		
PCB REV	P2597-C02	PAGE	27 OF 34
BOM REV	A	DATE	23-OCT-2017

5V & 3V3 SYS POWER SUPPLIES

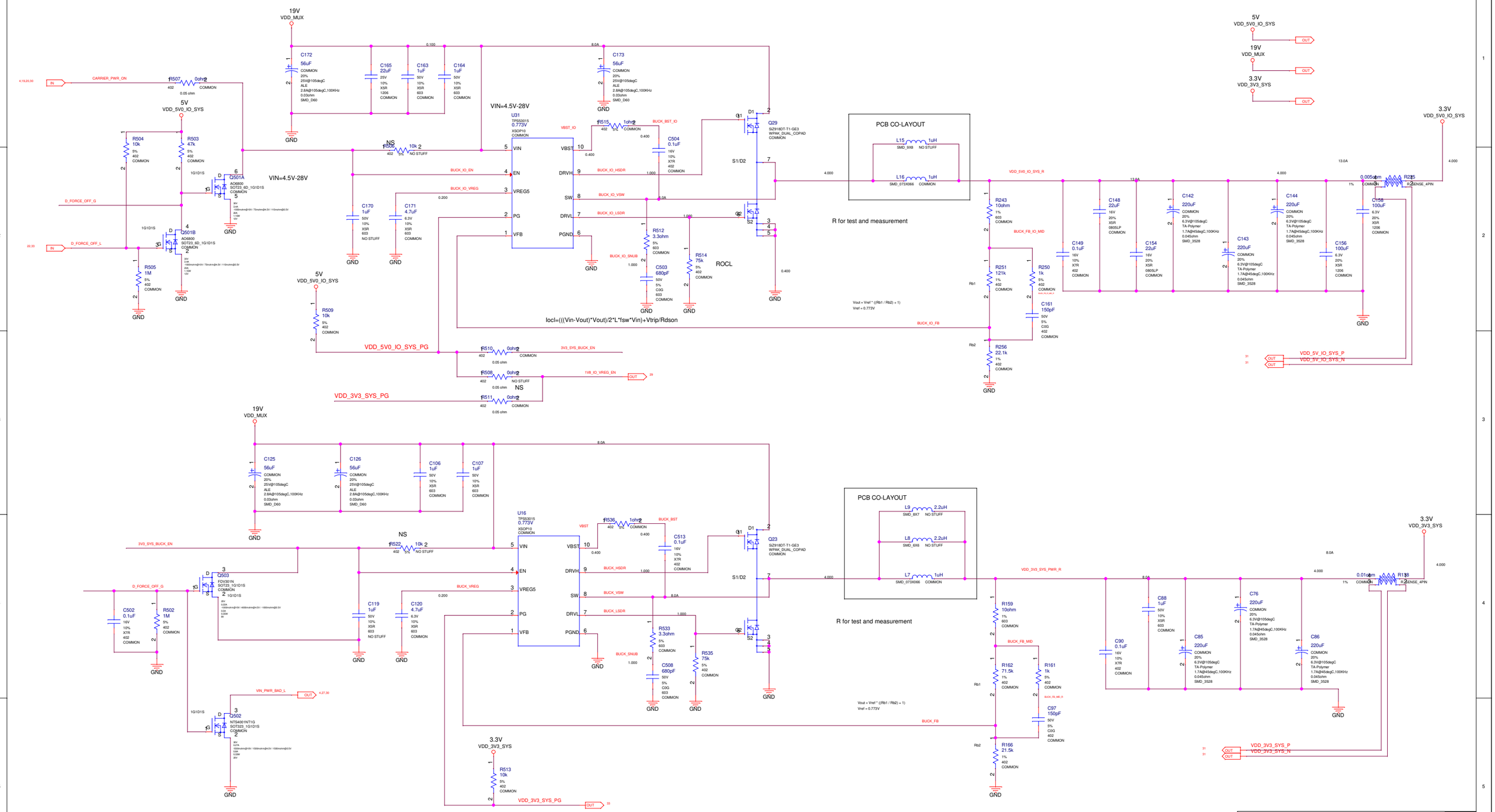

ASSEMBLY	<ASSEMBLY_DESCRIPTION>
PAGE DETAIL	5V & 3V3 Vregs

ALL NVIDIA DESIGN SPECIFICATIONS, REFERENCE SPECIFICATIONS, REFERENCE BOARDS, FILES, DRAWINGS, DIAGNOSTICS, LISTS AND OTHER DOCUMENTS OR INFORMATION (TOGETHER AND SEPARATELY, 'MATERIALS') ARE BEING PROVIDED 'AS IS'. THE MATERIALS MAY CONTAIN KNOWN AND UNKNOWN VIOLATIONS OR DEVIATIONS OF INDUSTRY STANDARDS AND SPECIFICATIONS. NVIDIA MAKES NO WARRANTIES, EXPRESSED, IMPLIED, STATUTORY OR OTHERWISE WITH RESPECT TO THE MATERIALS OR OTHERWISE, AND EXPRESSLY DISCLAIMS ALL IMPLIED WARRANTIES INCLUDING, WITHOUT LIMITATION, THE WARRANTIES OF DESIGN, OF NONINFRINGEMENT, MERCHANTABILITY OR FITNESS FOR A PARTICULAR PURPOSE, OR ARISING FROM A COURSE OF DEALING, TRADE USAGE, TRADE PRACTICE, OR INDUSTRY STANDARDS.

NVIDIA CORPORATION
2701 SAN TOMAS EXPRESSWAY
SANTA CLARA, CA 95050, USA

NV_PN	600-82597-BASE-900		
PCB REV	P2597-C02	PAGE	28 OF 34
BOM REV	A	DATE	23-OCT-2017

1V8 POWER SUPPLY AND 3V3_SYS

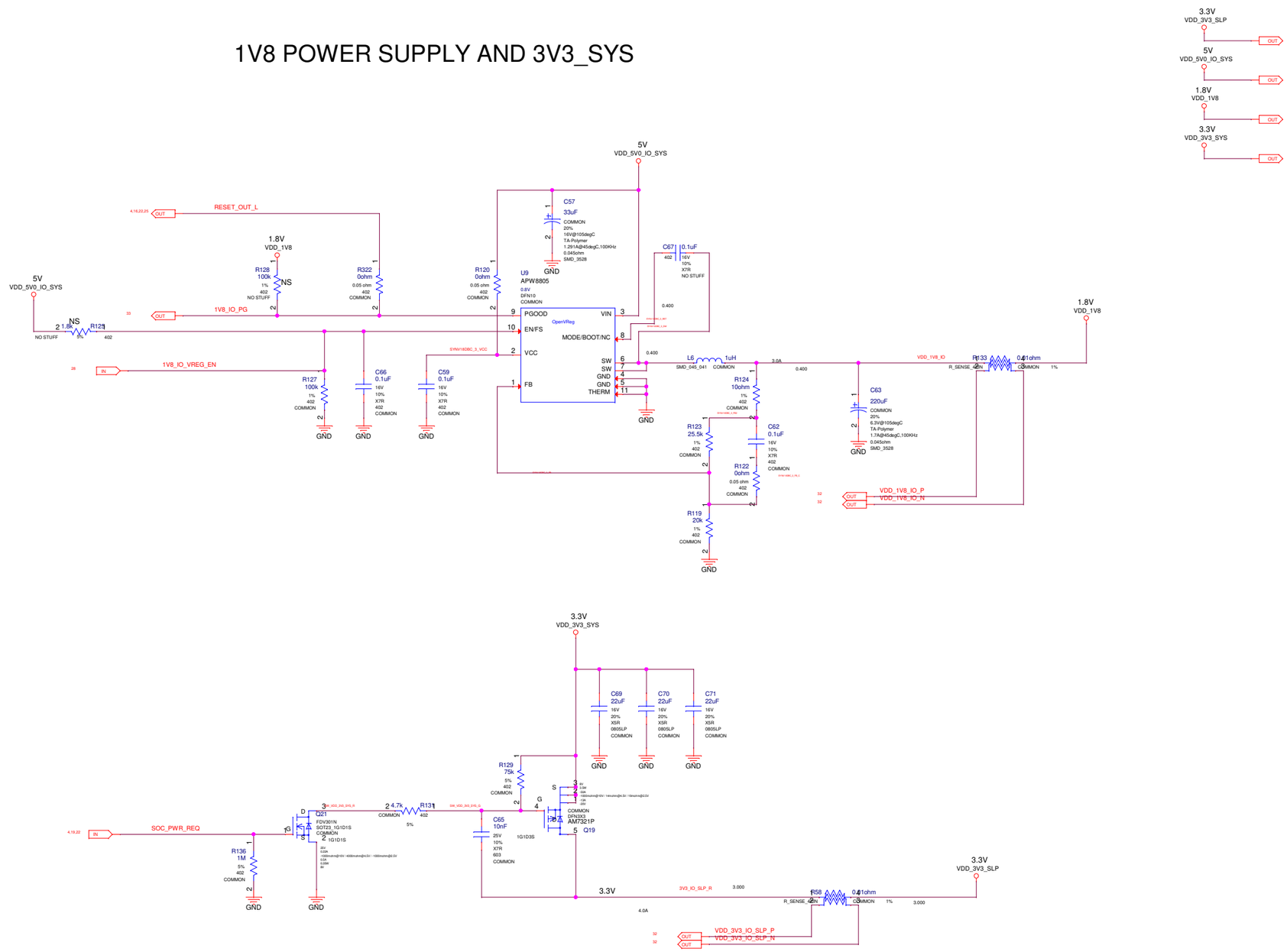

ASSEMBLY	<ASSEMBLY_DESCRIPTION>
PAGE DETAIL	3V3 SLP AND 1.8V Vregs

ALL NVIDIA DESIGN SPECIFICATIONS, REFERENCE SPECIFICATIONS, REFERENCE BOARDS, FILES, DRAWINGS, DIAGNOSTICS, LISTS AND OTHER DOCUMENTS OR INFORMATION (TOGETHER AND SEPARATELY, 'MATERIALS') ARE BEING PROVIDED 'AS IS'. THE MATERIALS MAY CONTAIN KNOWN AND UNKNOWN VIOLATIONS OR DEVIATIONS OF INDUSTRY STANDARDS AND SPECIFICATIONS. NVIDIA MAKES NO WARRANTIES, EXPRESSED, IMPLIED, STATUTORY OR OTHERWISE WITH RESPECT TO THE MATERIALS OR OTHERWISE, AND EXPRESSLY DISCLAIMS ALL IMPLIED WARRANTIES INCLUDING, WITHOUT LIMITATION, THE WARRANTIES OF DESIGN, OF NONINFRINGEMENT, MERCHANTABILITY OR FITNESS FOR A PARTICULAR PURPOSE, OR ARISING FROM A COURSE OF DEALING, TRADE USAGE, TRADE PRACTICE, OR INDUSTRY STANDARDS.

NVIDIA CORPORATION
2701 SAN TOMAS EXPRESSWAY
SANTA CLARA, CA 95050, USA

NV_PN	600-82597-BASE-900		
PCB REV	P2597-C02	PAGE	29 OF 34
BOM REV	A	DATE	23-OCT-2017

RAIL DISCHARGE

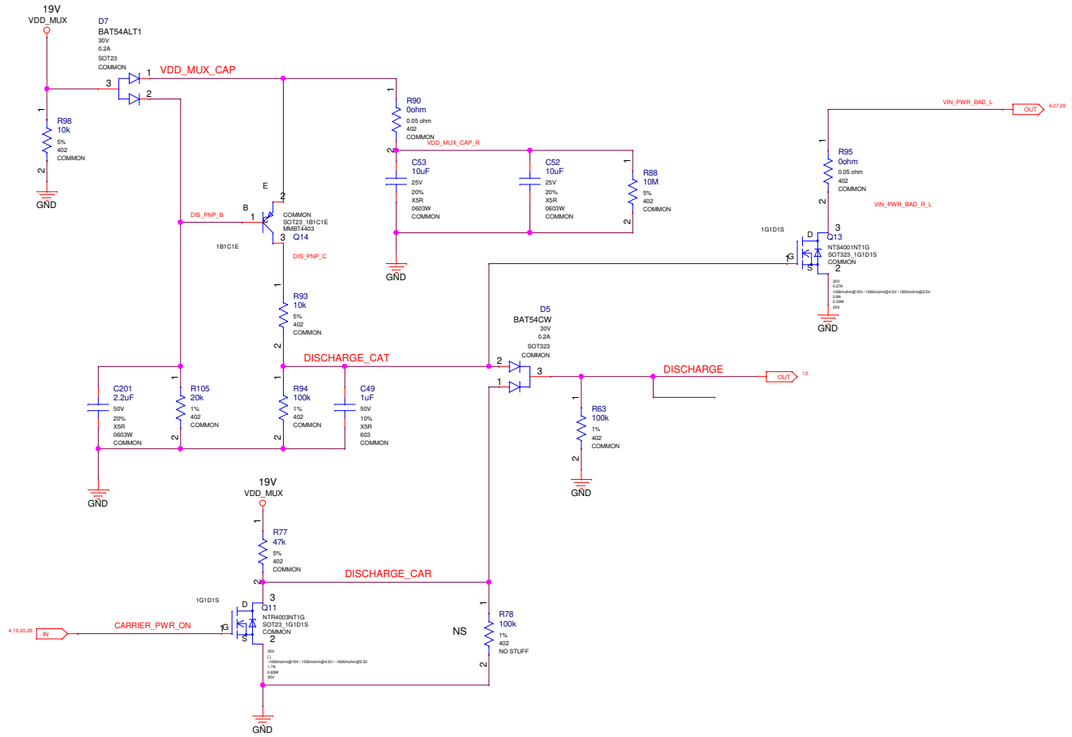

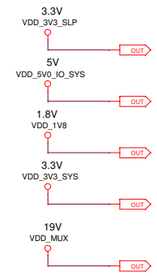

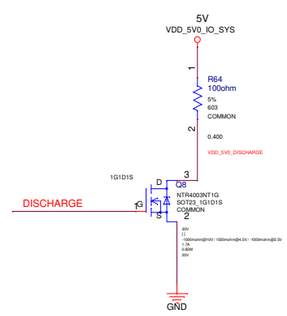

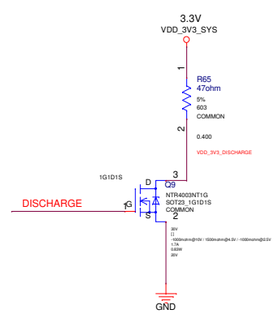

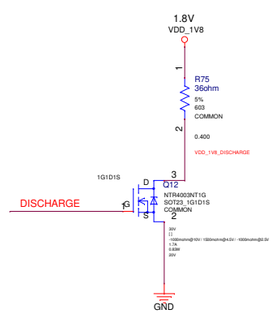

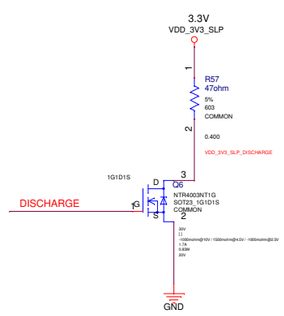

ASSEMBLY	<ASSEMBLY_DESCRIPTION>
PAGE DETAIL	Rail Discharge

ALL NVIDIA DESIGN SPECIFICATIONS, REFERENCE SPECIFICATIONS, REFERENCE BOARDS, FILES, DRAWINGS, DIAGNOSTICS, LISTS AND OTHER DOCUMENTS OR INFORMATION (TOGETHER AND SEPARATELY, "MATERIALS") ARE BEING PROVIDED "AS IS". THE MATERIALS MAY CONTAIN KNOWN AND UNKNOWN VIOLATIONS OR DEVIATIONS OF INDUSTRY STANDARDS AND SPECIFICATIONS. NVIDIA MAKES NO WARRANTIES, EXPRESSED, IMPLIED, STATUTORY OR OTHERWISE WITH RESPECT TO THE MATERIALS OR OTHERWISE, AND EXPRESSLY DISCLAIMS ALL IMPLIED WARRANTIES INCLUDING, WITHOUT LIMITATION, THE WARRANTIES OF DESIGN, OF NONINFRINGEMENT, MERCHANTABILITY OR FITNESS FOR A PARTICULAR PURPOSE, OR ARISING FROM A COURSE OF DEALING, TRADE USAGE, TRADE PRACTICE, OR INDUSTRY STANDARDS.

NVIDIA CORPORATION
2701 SAN TOMAS EXPRESSWAY
SANTA CLARA, CA 95050, USA

NV_PN	600-82597-BASE-900		
PCB REV	P2597-C02	PAGE	30 OF 34
BOM REV	A	DATE	23-OCT-2017

POWER MONITORS I

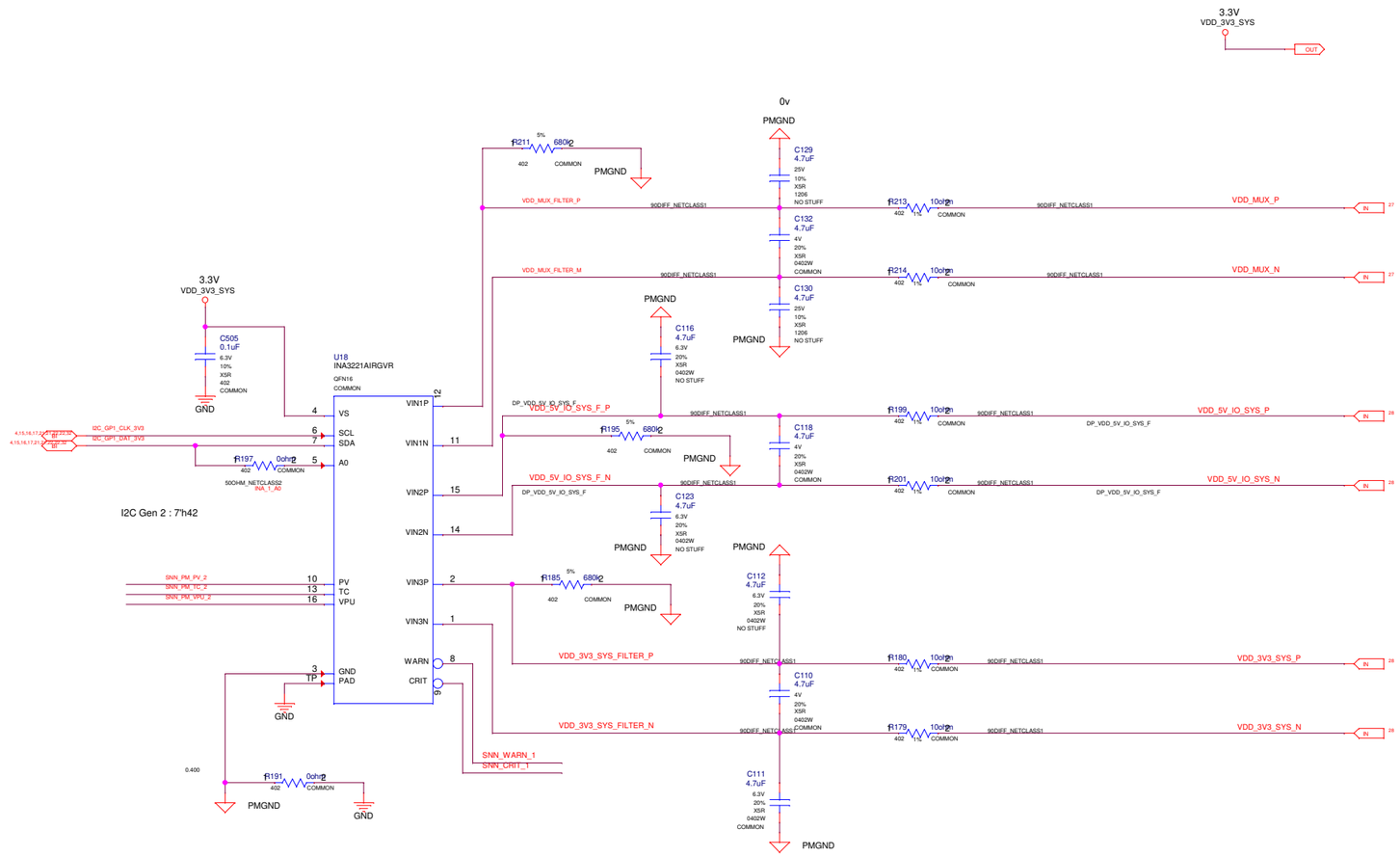

ASSEMBLY	<ASSEMBLY_DESCRIPTION>
PAGE DETAIL	Power Monitor I

ALL NVIDIA DESIGN SPECIFICATIONS, REFERENCE SPECIFICATIONS, REFERENCE BOARDS, FILES, DRAWINGS, DIAGNOSTICS, LISTS AND OTHER DOCUMENTS OR INFORMATION (TOGETHER AND SEPARATELY, "MATERIALS") ARE BEING PROVIDED "AS IS". THE MATERIALS MAY CONTAIN KNOWN AND UNKNOWN VIOLATIONS OR DEVIATIONS OF INDUSTRY STANDARDS AND SPECIFICATIONS. NVIDIA MAKES NO WARRANTIES, EXPRESSED, IMPLIED, STATUTORY OR OTHERWISE WITH RESPECT TO THE MATERIALS OR OTHERWISE, AND EXPRESSLY DISCLAIMS ALL IMPLIED WARRANTIES INCLUDING, WITHOUT LIMITATION, THE WARRANTIES OF DESIGN, OF NONINFRINGEMENT, MERCHANTABILITY OR FITNESS FOR A PARTICULAR PURPOSE, OR ARISING FROM A COURSE OF DEALING, TRADE USAGE, TRADE PRACTICE, OR INDUSTRY STANDARDS.

NVIDIA CORPORATION
2701 SAN TOMAS EXPRESSWAY
SANTA CLARA, CA 95050, USA

NV_PN	600-82597-BASE-900		
PCB REV	P2597-C02	PAGE	31 OF 34
BOM REV	A	DATE	23-OCT-2017

POWER MONITORS II

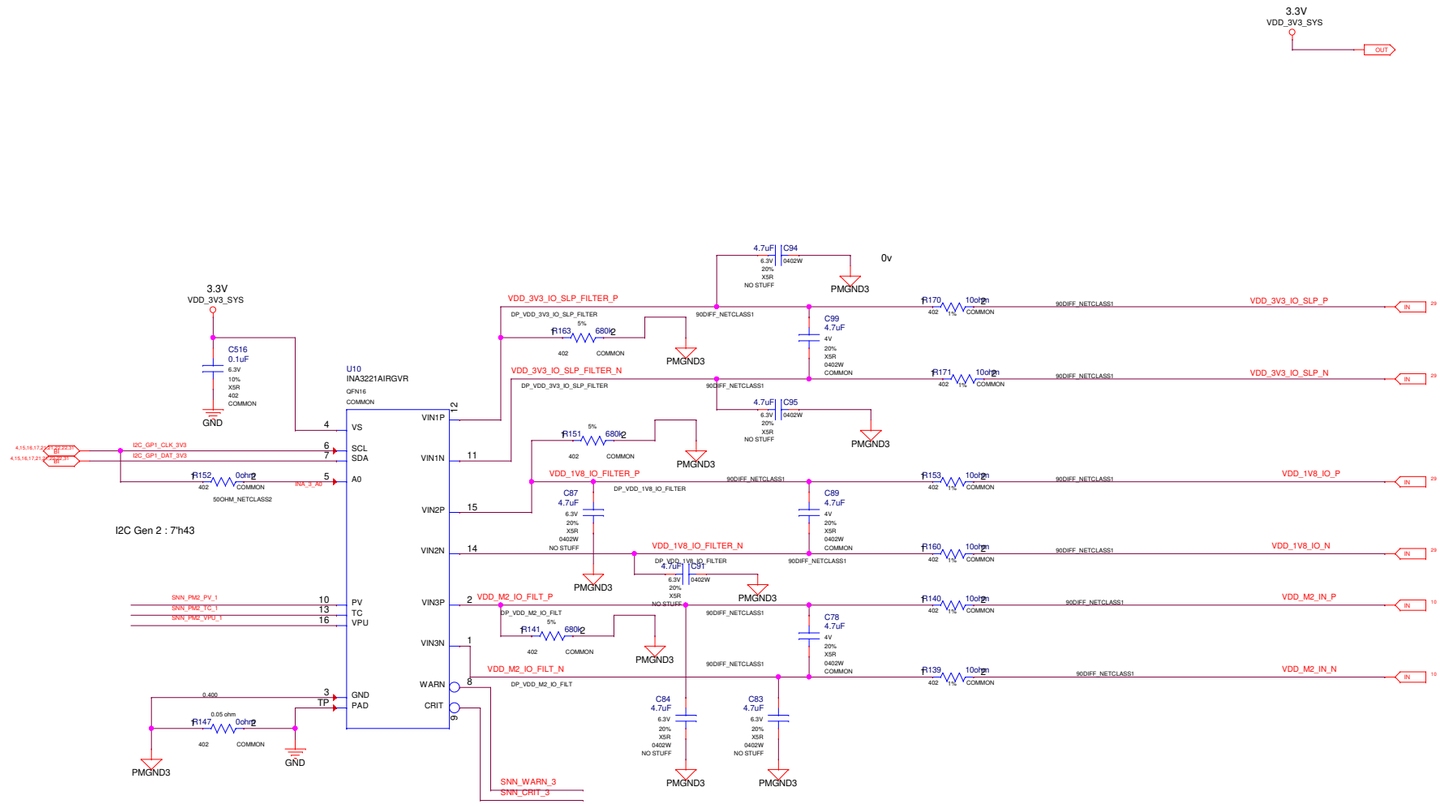

3V3 RUN RAIL

1.8V SYSTEM

M.2 3.3V

ASSEMBLY	<ASSEMBLY_DESCRIPTION>
PAGE DETAIL	Power Monitor II

ALL NVIDIA DESIGN SPECIFICATIONS, REFERENCE SPECIFICATIONS, REFERENCE BOARDS, FILES, DRAWINGS, DIAGNOSTICS, LISTS AND OTHER DOCUMENTS OR INFORMATION (TOGETHER AND SEPARATELY, 'MATERIALS') ARE BEING PROVIDED 'AS IS'. THE MATERIALS MAY CONTAIN KNOWN AND UNKNOWN VIOLATIONS OR DEVIATIONS OF INDUSTRY STANDARDS AND SPECIFICATIONS. NVIDIA MAKES NO WARRANTIES, EXPRESSED, IMPLIED, STATUTORY OR OTHERWISE WITH RESPECT TO THE MATERIALS OR OTHERWISE, AND EXPRESSLY DISCLAIMS ALL IMPLIED WARRANTIES INCLUDING, WITHOUT LIMITATION, THE WARRANTIES OF DESIGN, OF NONINFRINGEMENT, MERCHANTABILITY OR FITNESS FOR A PARTICULAR PURPOSE, OR ARISING FROM A COURSE OF DEALING, TRADE USAGE, TRADE PRACTICE, OR INDUSTRY STANDARDS.

NVIDIA CORPORATION
2701 SAN TOMAS EXPRESSWAY
SANTA CLARA, CA 95050, USA

NV_PN	600-82597-BASE-900		
PCB REV	P2597-C02	PAGE	32 OF 34
BOM REV	A	DATE	23-OCT-2017

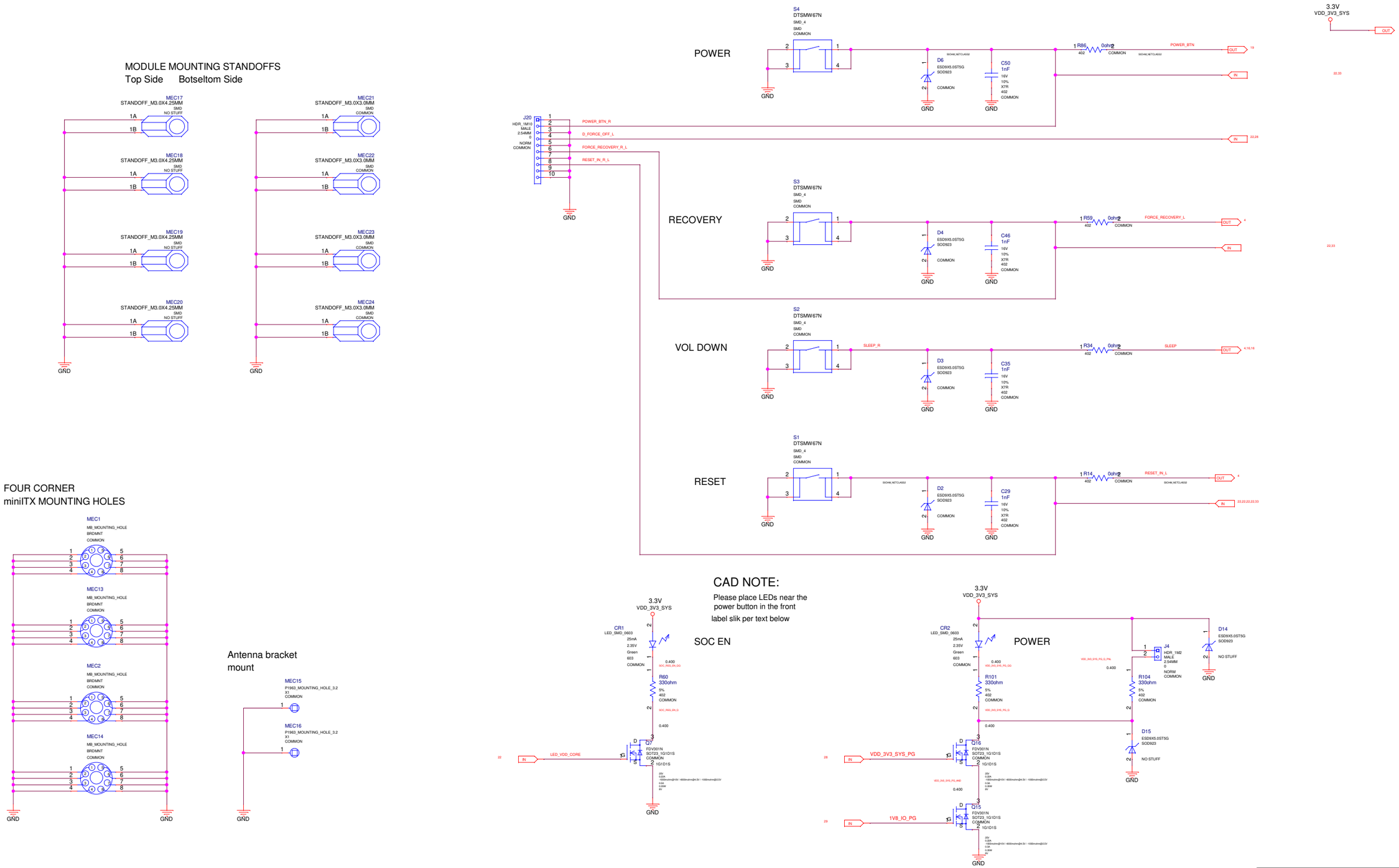

ASSEMBLY	<ASSEMBLY_DESCRIPTION>
PAGE DETAIL	Buttons and Mechanical

ALL NVIDIA DESIGN SPECIFICATIONS, REFERENCE SPECIFICATIONS, REFERENCE BOARDS, FILES, DRAWINGS, DIAGNOSTICS, LISTS AND OTHER DOCUMENTS OR INFORMATION (TOGETHER AND SEPARATELY, "MATERIALS") ARE BEING PROVIDED "AS IS". THE MATERIALS MAY CONTAIN KNOWN AND UNKNOWN VIOLATIONS OR DEVIATIONS OF INDUSTRY STANDARDS AND SPECIFICATIONS. NVIDIA MAKES NO WARRANTIES, EXPRESSED, IMPLIED, STATUTORY OR OTHERWISE WITH RESPECT TO THE MATERIALS OR OTHERWISE, AND EXPRESSLY DISCLAIMS ALL IMPLIED WARRANTIES INCLUDING, WITHOUT LIMITATION, THE WARRANTIES OF DESIGN, OF NONINFRINGEMENT, MERCHANTABILITY OR FITNESS FOR A PARTICULAR PURPOSE, OR ARISING FROM A COURSE OF DEALING, TRADE USAGE, TRADE PRACTICE, OR INDUSTRY STANDARDS.

NVIDIA CORPORATION
2701 SAN TOMAS EXPRESSWAY
SANTA CLARA, CA 95050, USA

NV_PN	600-82597-BASE-900		
PCB REV	P2597-C02	PAGE	33 OF 34
BOM REV	A	DATE	23-OCT-2017

Revision History

P2597-B03

Page 4: Added a red LED to indicate power is active on the CVM
Page 8: Replaced U21 due to EOL on previous part
Page 9: Changed an unused pull up to a TVS device on PCIe RST
PCIE_WAKE_L and PCIE_CLKREQ
Page 10: Change R524 and R538 to 1.8k (tune for gyro bypass)
Page 10: Changed M.2 I2C to 1.8v
Page 12: Added discharge for VDD_5V0_IO_SLP and VDD_12V_SLP
Added a red LED to 12v at PCIe connector
Changed DEV_SLP buffer to OD
Page 13: Changed R9 to 100pF cap C205 (EU emissions)
Page 14: Changed R548 to 4.7k ohm and R544 to 100k
Page 15: Changed DBG I2C MUX to I2C repeater with enable
Added pull ups on inputs to U6
Page 16: Added 1206 0ohm resistors on J26
Added pull downs on J21 side of U22 and U7
Added reset connection to U22 and U7
Added ESD protection
Page 22: Added pull-up on J10 pin 48 for direct INA support
Added 0ohm resistor on the fan PWM to allow always on
Added a pull down on UART4_TX
Added ESD protection to pins 4 and 6 of Q17
Page 24: Changed U11 EEPROM to AT24C02D-MAHM-T
Page 25: Added supervisor to hold Tegra in reset until 1.8v up
Page 27: Added additional bulk site on VDD_MOD
Page 28: Changed 5v and 3.3v VR FETs for better thermal perf
Page 30: Added C201 and changed C49 to 1uF to filter DC loss
Page 33: Added ESD option for power LED

P2597-B04

Corrected minor solderpaste issue

Page 12: Stuffed R315
Page 14: Changed R563 and R565 to 3.3ohm
Page 25: Unstuffed page

BOM rev B

Page 23: Changed C36 to 0.1uF
Page 30: Changed C201 to 2.2uF and R105 to 20k

P2597-C00

Page 13: Changed ENET CM Cap on transformer pirmary side
from one shared to indiviual caps
Page 14: Changed HDMI ESD diode to a package with
footprint compatible parts
Page 19: Added ON/OFF supervisor ckt to accomdate both
AutoPMIC & MobilePMIC On/Off control
Page 20: Added ON/OFF Glue logic to accomdate both
AutoPMIC & MobilePMIC On/Off control

P2597-C01

Page 12: Changed SATA to right angle connetor to remove
interference with PCIe card
Page 19: Add seperate delay path for CARRIER_PWR_ON to
allow power cycle on RESET
Add option for ON/OFF PB or INT to drive WAKE
to allow short POWER_BTN press to wake module
Add logic qualifier to INT for DFF to WAKE not
power down on PB press in SLEEP
Page 20: Add logic qualifier to gate initial momentary
pulse in state mode to remove state PWR_ON glitch
Page 33: Changed 1x2 headers for buttons to 1x10 header,
so customer won't poke finger on header while
accessing buttons

ASSEMBLY	<ASSEMBLY_DESCRIPTION>
PAGE DETAIL	REVISION HISTORY

ALL NVIDIA DESIGN SPECIFICATIONS, REFERENCE SPECIFICATIONS, REFERENCE BOARDS, FILES, DRAWINGS, DIAGNOSTICS, LISTS AND OTHER DOCUMENTS OR INFORMATION (TOGETHER AND SEPARATELY, "MATERIALS") ARE BEING PROVIDED "AS IS". THE MATERIALS MAY CONTAIN KNOWN AND UNKNOWN VIOLATIONS OR DEVIATIONS OF INDUSTRY STANDARDS AND SPECIFICATIONS. NVIDIA MAKES NO WARRANTIES, EXPRESSED, IMPLIED, STATUTORY OR OTHERWISE WITH RESPECT TO THE MATERIALS OR OTHERWISE, AND EXPRESSLY DISCLAIMS ALL IMPLIED WARRANTIES INCLUDING, WITHOUT LIMITATION, THE WARRANTIES OF DESIGN, OF NONINFRINGEMENT, MERCHANTABILITY OR FITNESS FOR A PARTICULAR PURPOSE, OR ARISING FROM A COURSE OF DEALING, TRADE USAGE, TRADE PRACTICE, OR INDUSTRY STANDARDS.

NVIDIA CORPORATION
2701 SAN TOMAS EXPRESSWAY
SANTA CLARA, CA 95050, USA

NV_PN	600-82597-BASE-900		
PCB REV	P2597-C02	PAGE	34 OF 34
BOM REV	A	DATE	23-OCT-2017